IMPORTANT! KEEP FOR FUTURE REFERENCE

Flair furnishings
www.flairbeds.co.uk

PANTHER METAL SMALL DOUBLE TV BED WITH STORAGE

Assembly Instructions

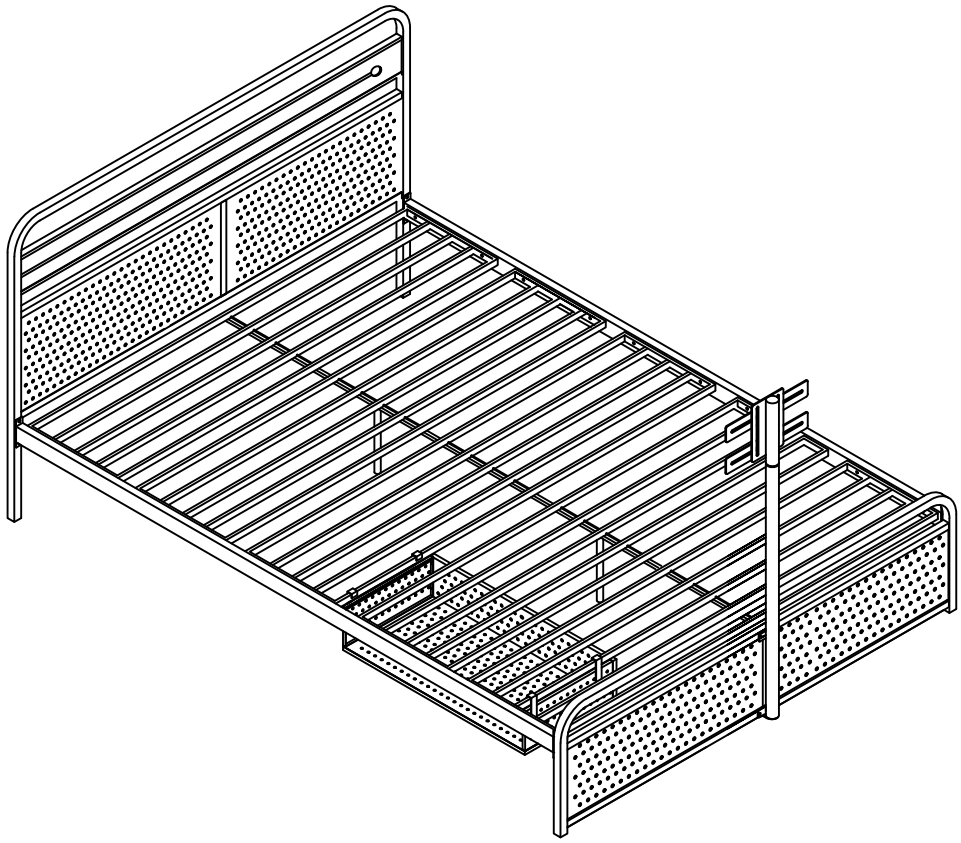

FOR PARTS & TECHNICAL SUPPORT VISIT:
TELEPHONE: 019 249 50108
EMAIL ADDRESS:
support@bedkingdom.co.uk

Manufacturer:	**FLAIR FURNITURE LTD**	**EU REP Contact Information:**	**eucomply OÜ**
Address:	**Oldfield Ln, Heckmondwike WF16 0JD**	**Address:**	**Pärnu mnt 139b-14 11317 Tallinn, Estonia**
Contact Information:	support@bedkingdom.co.uk 01924950108	**Contact Information:**	hello@eucompliancepartner.com +3375690241

- **WARNING: Contains small parts – choking hazard.**
- **WARNING: Plastic packaging may cause suffocation. Keep away from babies and young children.**
- **WARNING: Keep away from open flames and other heat sources.**
- **WARNING: Ensure adequate airflow and ventilation at all times to prevent airway obstruction.**
- **WARNING: Never leave a child unattended in a stroller with this product. Strangulation hazard may occur.**
- **WARNING: Ensure all attachments are secure before use. Do not use if parts are loose or damaged.**

Tools required (Not Provided)	2 Person assembly recommend	90min (Approx) Set Up
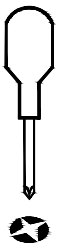	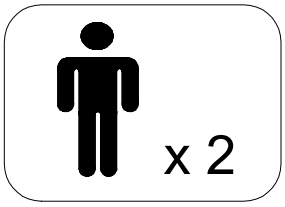	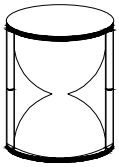

ASSEMBLY INSTRUCTIONS

NOTES: IMPORTANT! KEEP FOR FUTURE REFERENCE

PLEASE READ this sheet prior to assembly to familiarize yourself with the various stage of construction. Carefully open the pack supplied and check against the part and fitting check list. Do not destroy any of the packing until you are certain that you have all the necessary parts for assembly.

CAUTION: There are small components used in the construction of this unit. These loose items should be kept away from young children whilst assembling your unit to avoid the danger of choking hazards.

INFORMATION

- Importer: **Flair Furniture (bedkingdom.co.uk), Oldfield Lane, Heckmondwike, West Yorkshire, England, WF16 0JD**
- Due to the size of this product, we recommend that is assembled in the room intended for use.
- When you are ready to start, make sure that you have the right tools, plenty of space and clean, dry area for assembly. Unwrap all packaging materials and place each component on top of the carton box or on a clean floor to prevent from scratching.
- Check the pack and make sure you have all the parts listed.
- Tools are not included unless specified in the parts list.
- Ensure that this product is fully assembled as illustrated before use.
- Please keep the assembly instruction for future reference.
- If for any reason you need to return this item, you must return in original packaging. Please be note that assembled items cannot be returned.

WARNING:

- Do not use power tools to construct this product.
- Do not tighten screws until fully assembled.
- Do not over tighten screws or bolts.
- Do not stand on the product.
- Do not place bed near heat sources, windows or other furniture, This includes danger of blind cords, curtain pulls, other strings or cords.
- Ensure the support legs/base always remain in contact with the ground.
- Ensure all screws or bolts are tighten and inspect regularly.
- Not suitable for children under 4 years old.
- This product is intended for a maximun person's weight of 100kg per side. Do not exceed this weight.
- Children can be trapped between the bed and the wall. To avoid risk of serious injury the bed should be placed tight to the wall or have a gap of 300mm from the side of the bed to the wall. Do not use the bed if any part is broken, torn or missing.
- Please pay particular attention when children or animals to ensure that no accidental entrapment occurs whilst operating this product.

CARE INFORMATION:

- Never use scourer, abrasives or chemical cleaners.
- To clean wipe with a damp sponge and warm soapy water. Do Not use solvent-based cleaners or detergents as they can bleach or damage the product.
- Customer support: support@bedkingdom.co.uk

Parts List

Carton 1 of 2					
NO.	Part List	QTY	NO.	Part List	QTY
①	Headboard	1	⑨	Storage Side Panel (L)	1
②	Footboard	1	⑩	Storage Side Panel (R)	1
④	Slats	2	⑪	Storage Bottom Panel	1
⑤	TV Stand Iron Plate	2	⑫	HOOK	4
⑥	TV Stand Bracket	1	⑬	Remote controller	1
⑦	TV Stand post	1	⑮	Small Support leg	2
⑧	Storage Back Panel	1	⑯	Lower Side Rail	1

Carton 2 of 2					
NO.	Part List	QTY	NO.	Part List	QTY
③	Side Rail	2	⑭	Mid Post Support Bar	1
④	Slats	3			

Fitting List

A x 4	B x 8	C x 20	D x 27	E x 4
 6 x 15 mm	 6 x 20 mm	 6 x 25 mm	 6 x 12 mm	 6 x 15 mm

F x 1	G x 1	H x 19	I x 8
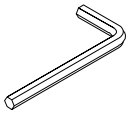			

Parts List

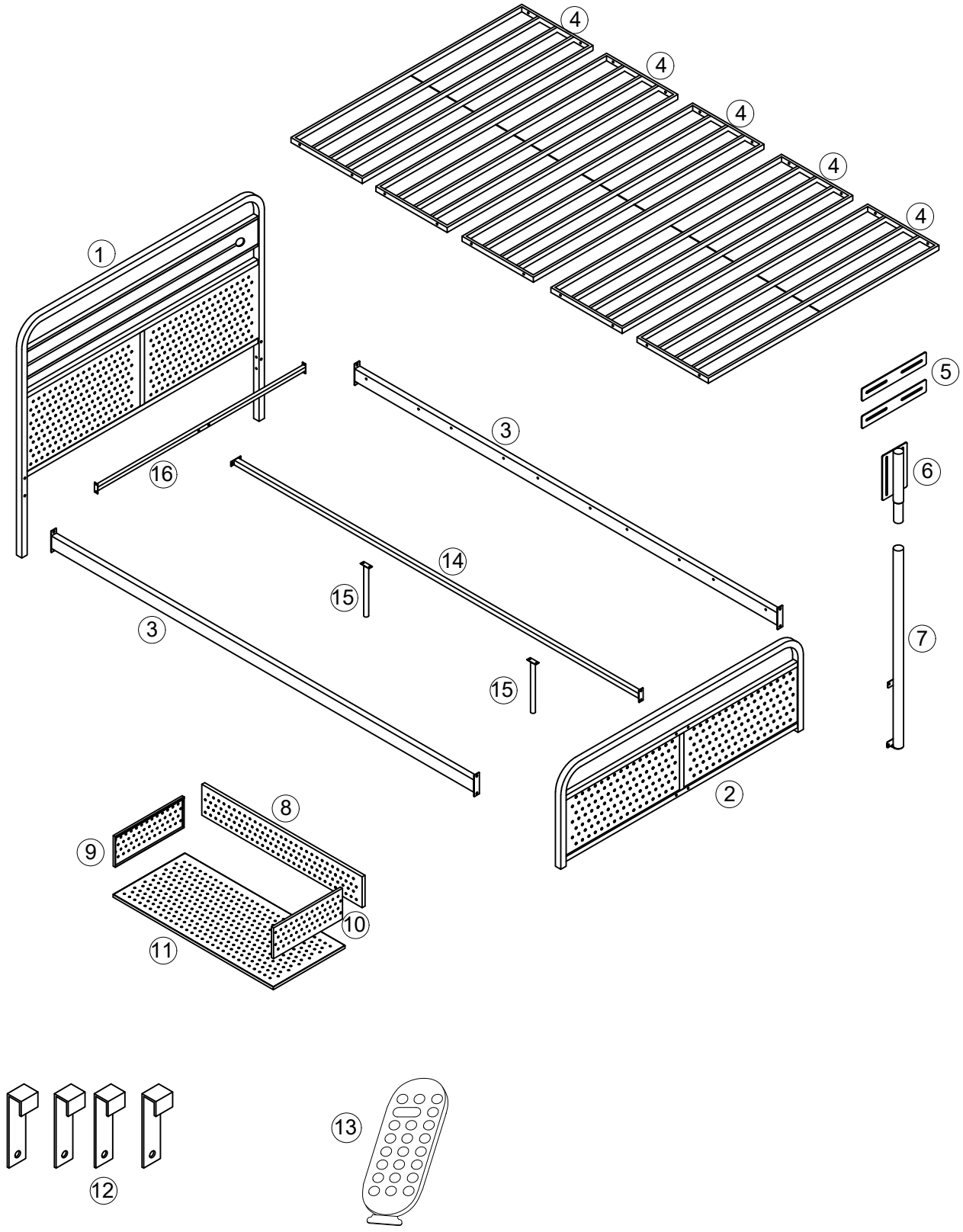

STEP 1

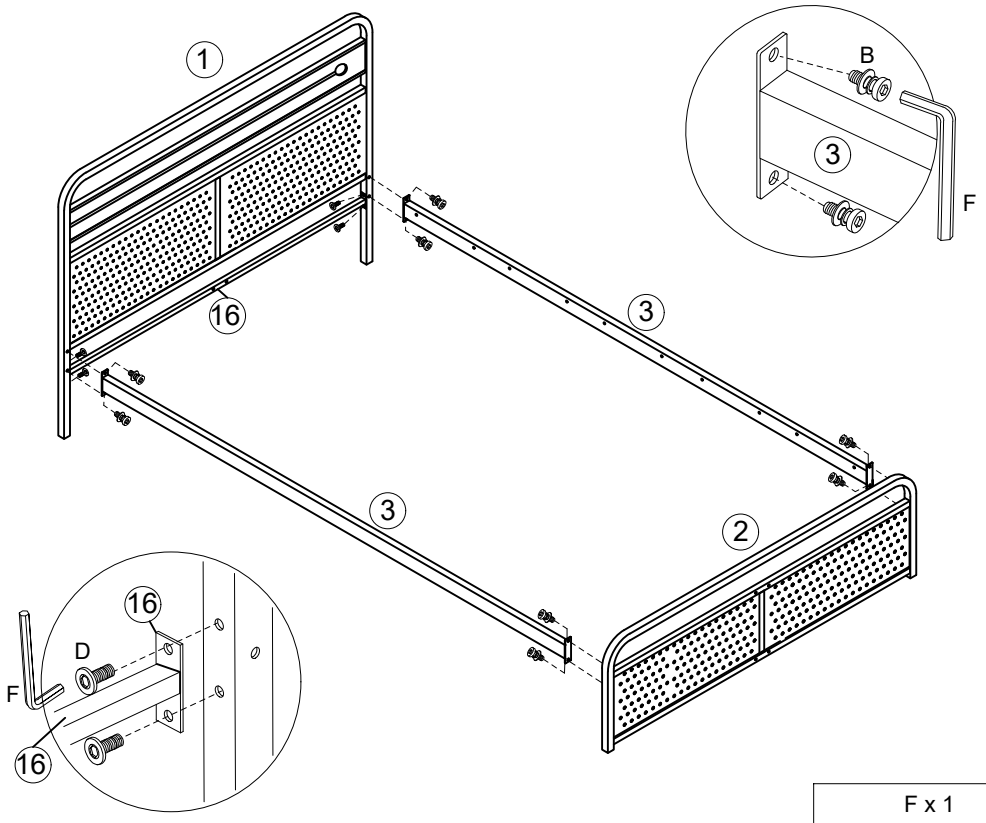

D x 4
 6 x 12 mm

F x 1	B x 8
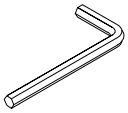	 6 x 20 mm

STEP 2

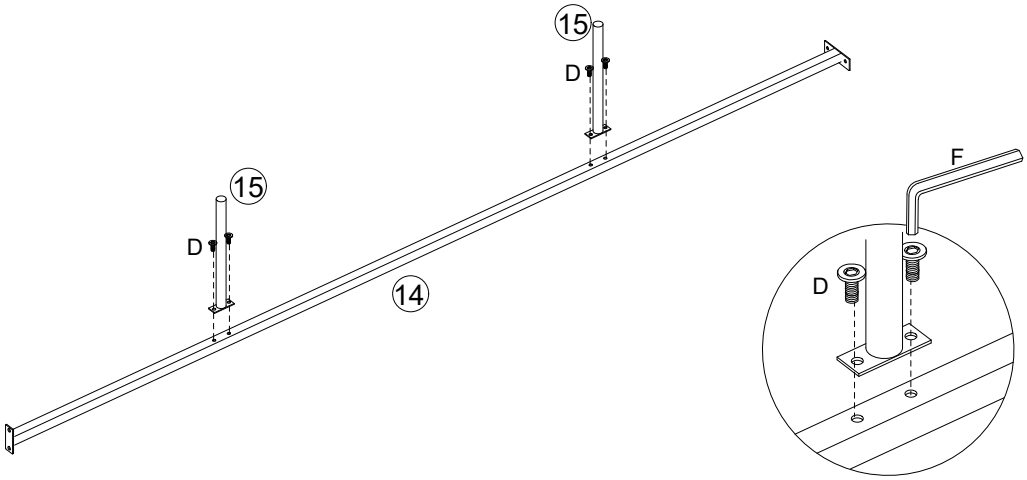

F x 1	D x 4
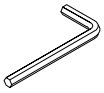	 6 x 12 mm

STEP 3

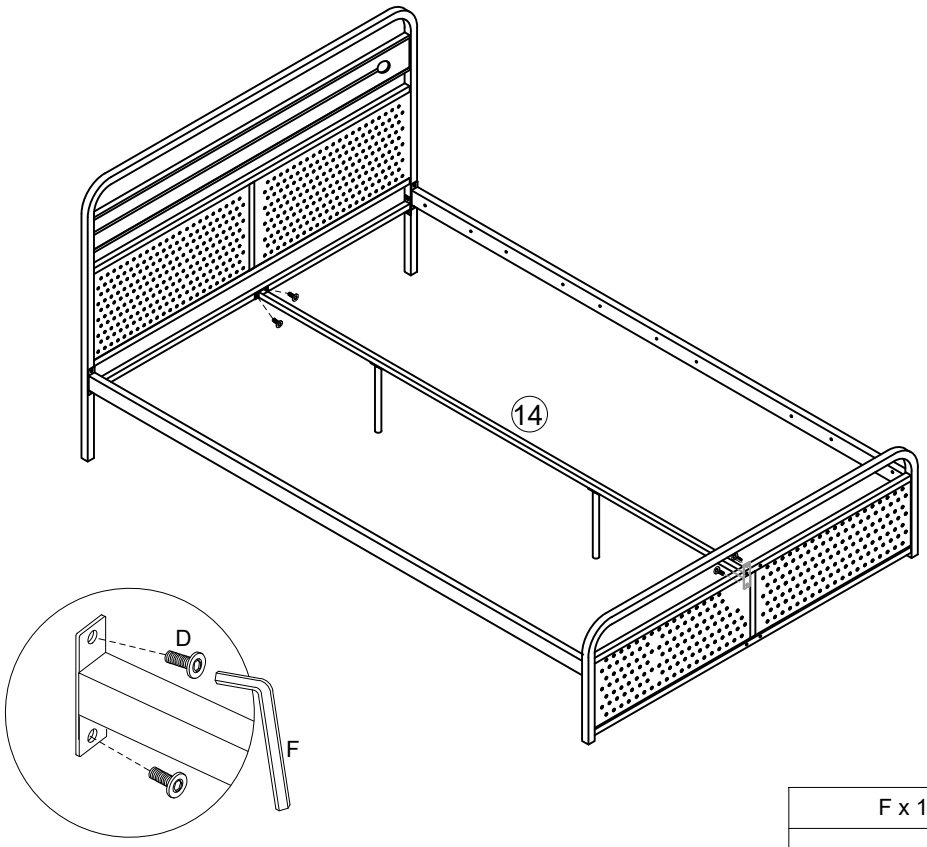

F x 1	D x 4
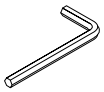	 6 x 12 mm

STEP 4

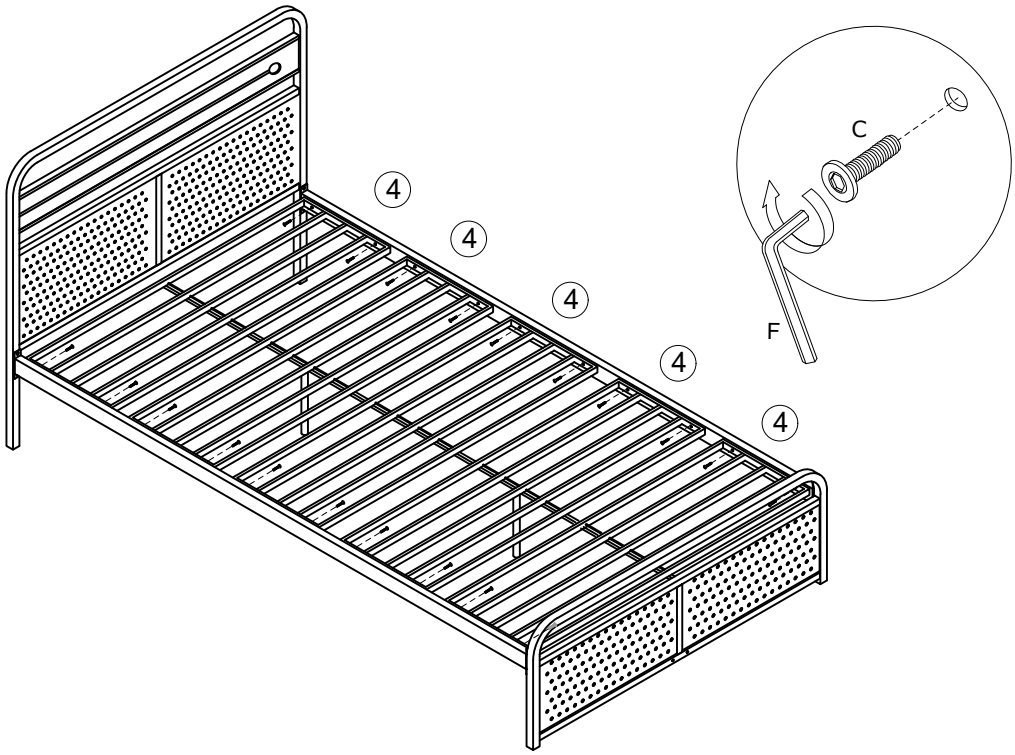

F x 1	C x 20
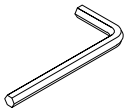	 6 x 25 mm

STEP 5

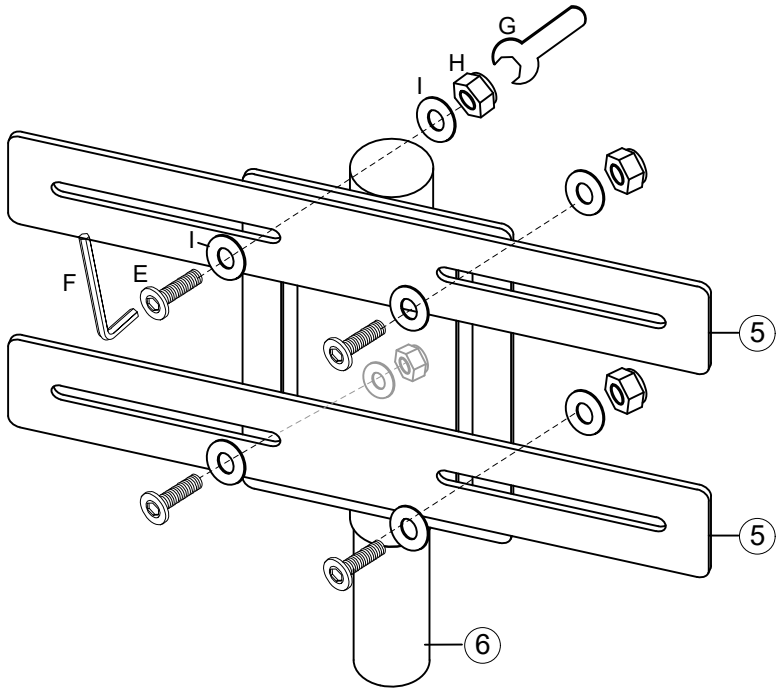

F x 1	G x 1	H x 4	I x 8	E x 4
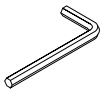				 6 x 15 mm

STEP 6

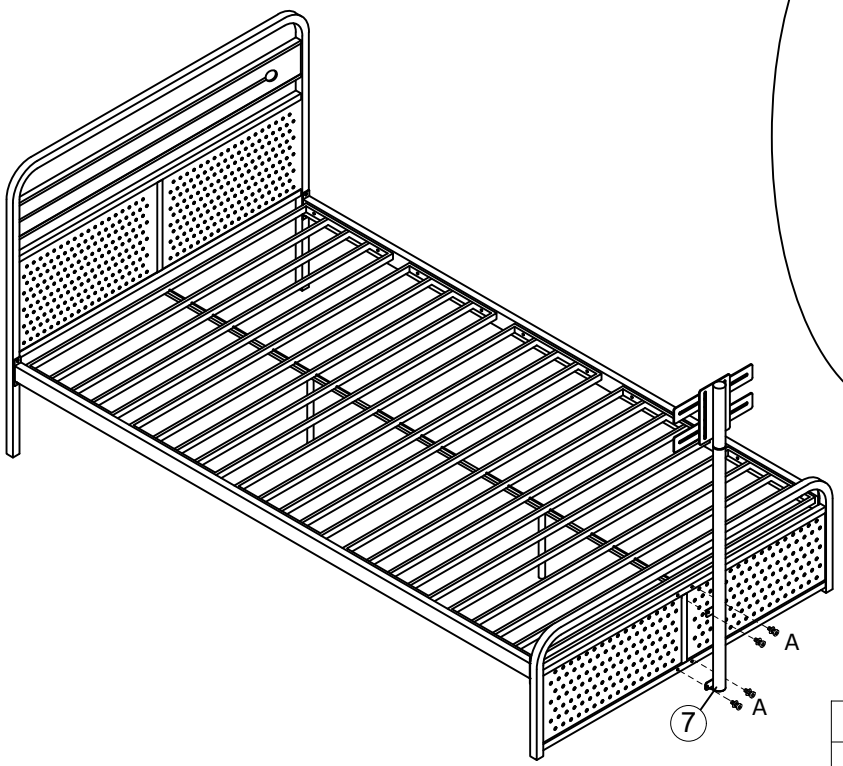

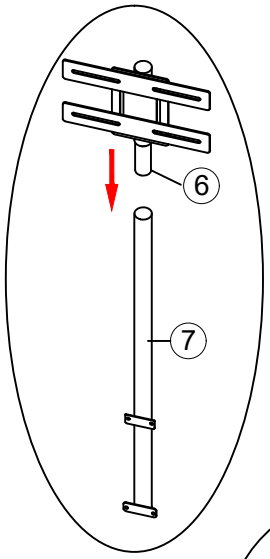

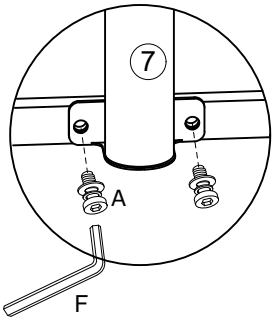

F x 1	A x 4
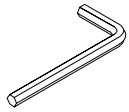	 6 x 15 mm

STEP 7

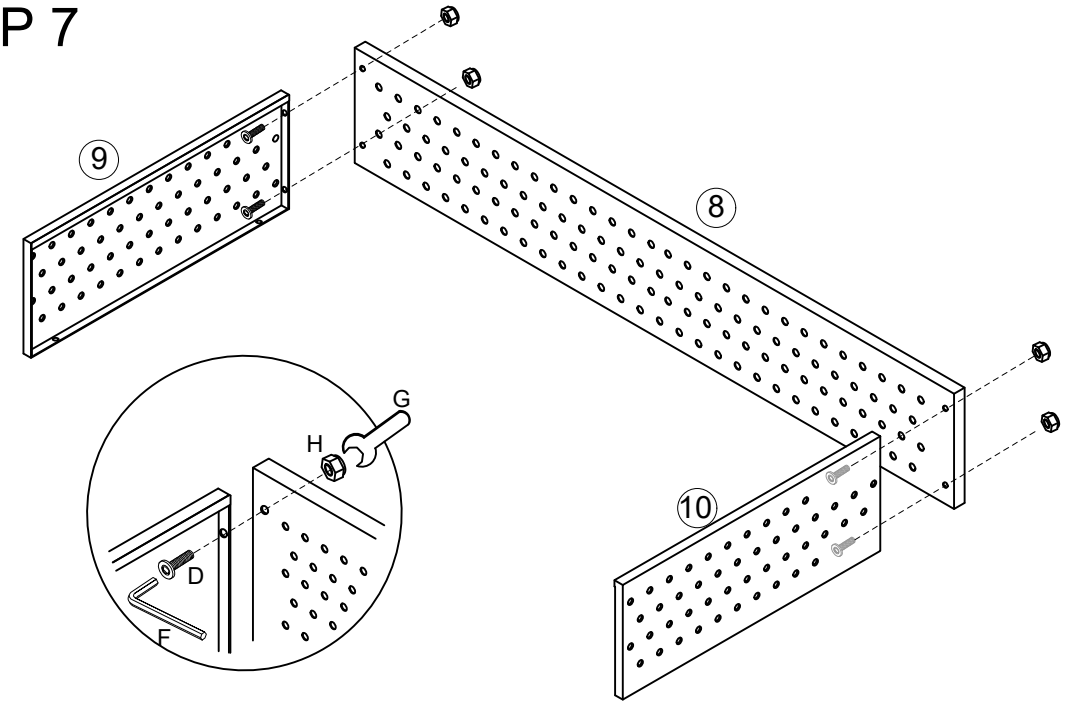

F x 1	G x 1	H x 4	D x 4
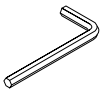			 6 x 12 mm

STEP 8

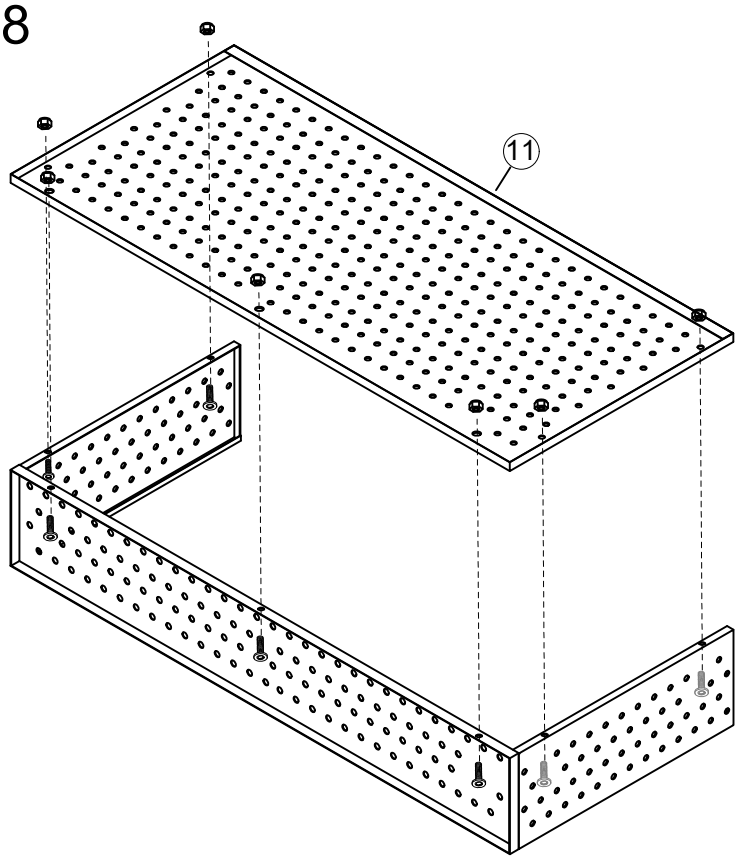

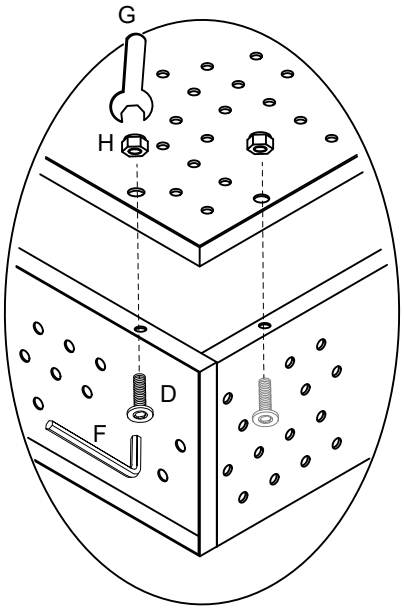

F x 1	G x 1	H x 7	D x 7
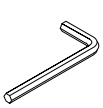			 6 x 12 mm

STEP 9

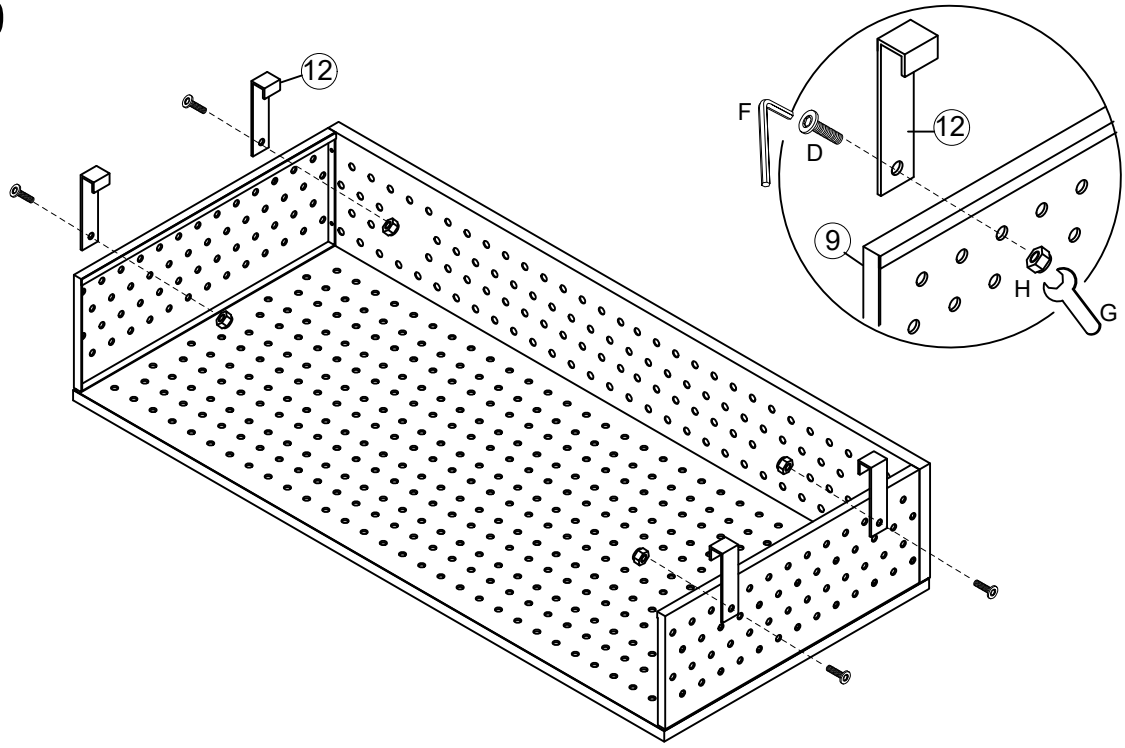

F x 1	G x 1	H x 4	D x 4
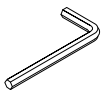			 6 x 12 mm

STEP 10

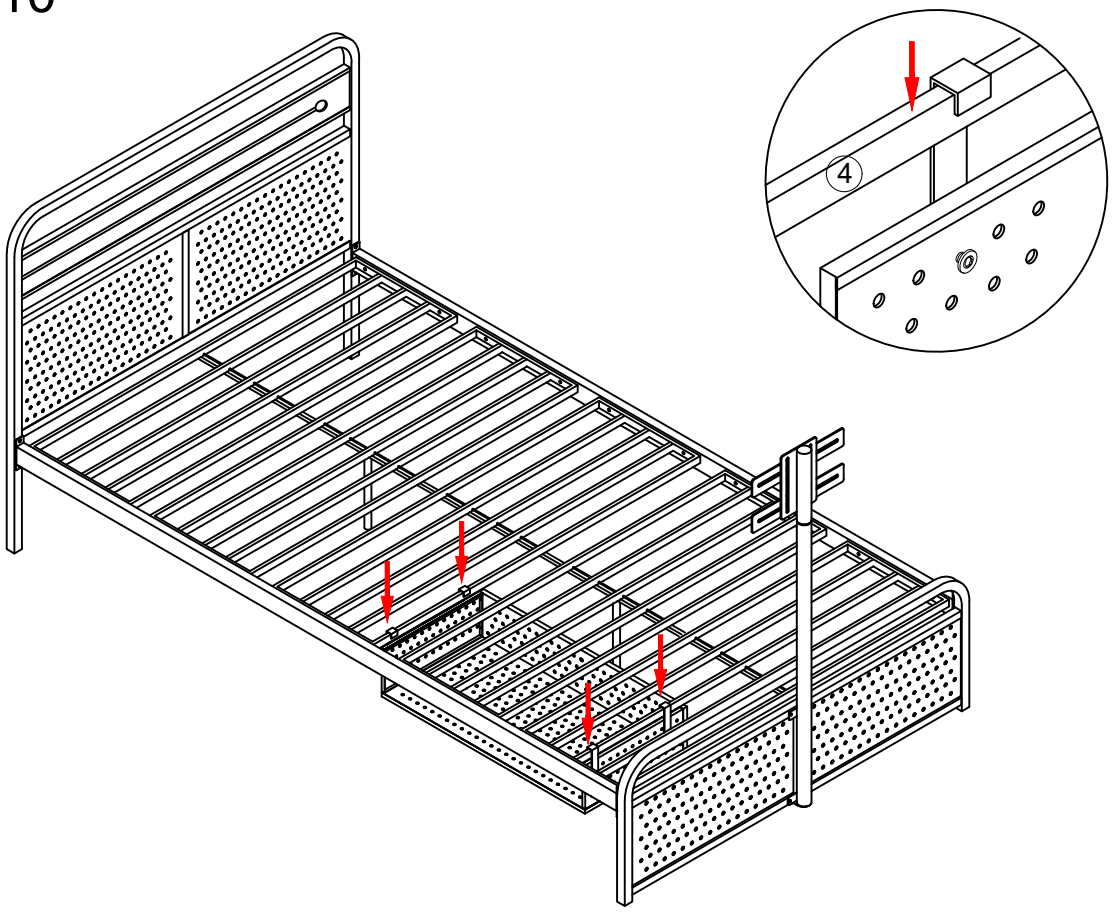

STEP 11

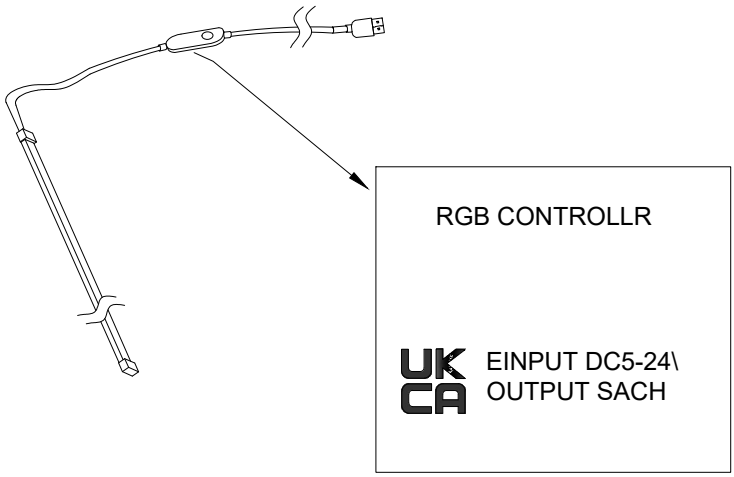

⚠ Safety Warnings

- •This remote control operates on batteries. Please insert the batteries correctly, following the indicated polarity (+/–). （Not provided)
- •Keep batteries out of reach of children. Small batteries may pose a choking or swallowing hazard. •Remove the batteries if they are depleted or if the remote control will not be used for an extended period to prevent leakage or damage.
- •Do not heat, disassemble, or dispose of batteries in fire, as this may cause injury or damage.

STEP 12

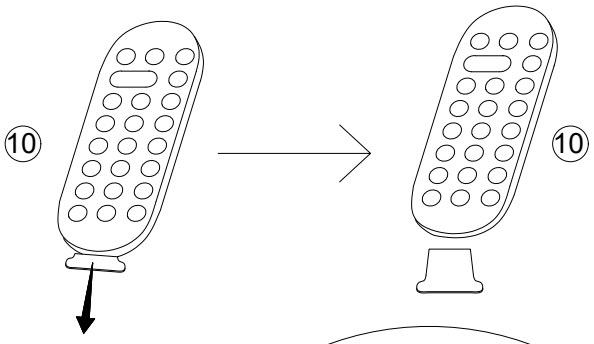

Notices

1.Please pull out the battery insulated plastic chip before using remote.

2.Press the lock key, the remote keys will be locked, press the lock key again, allthe remote keys will be unlocked.

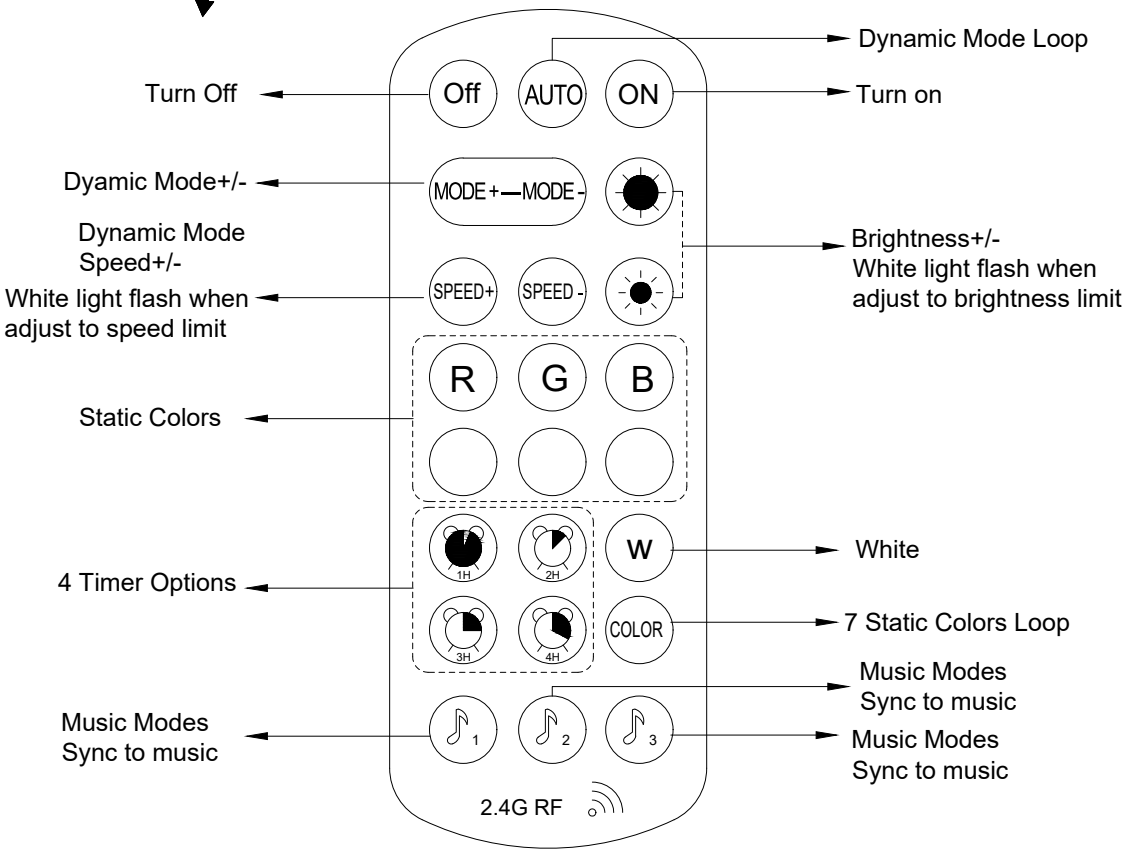

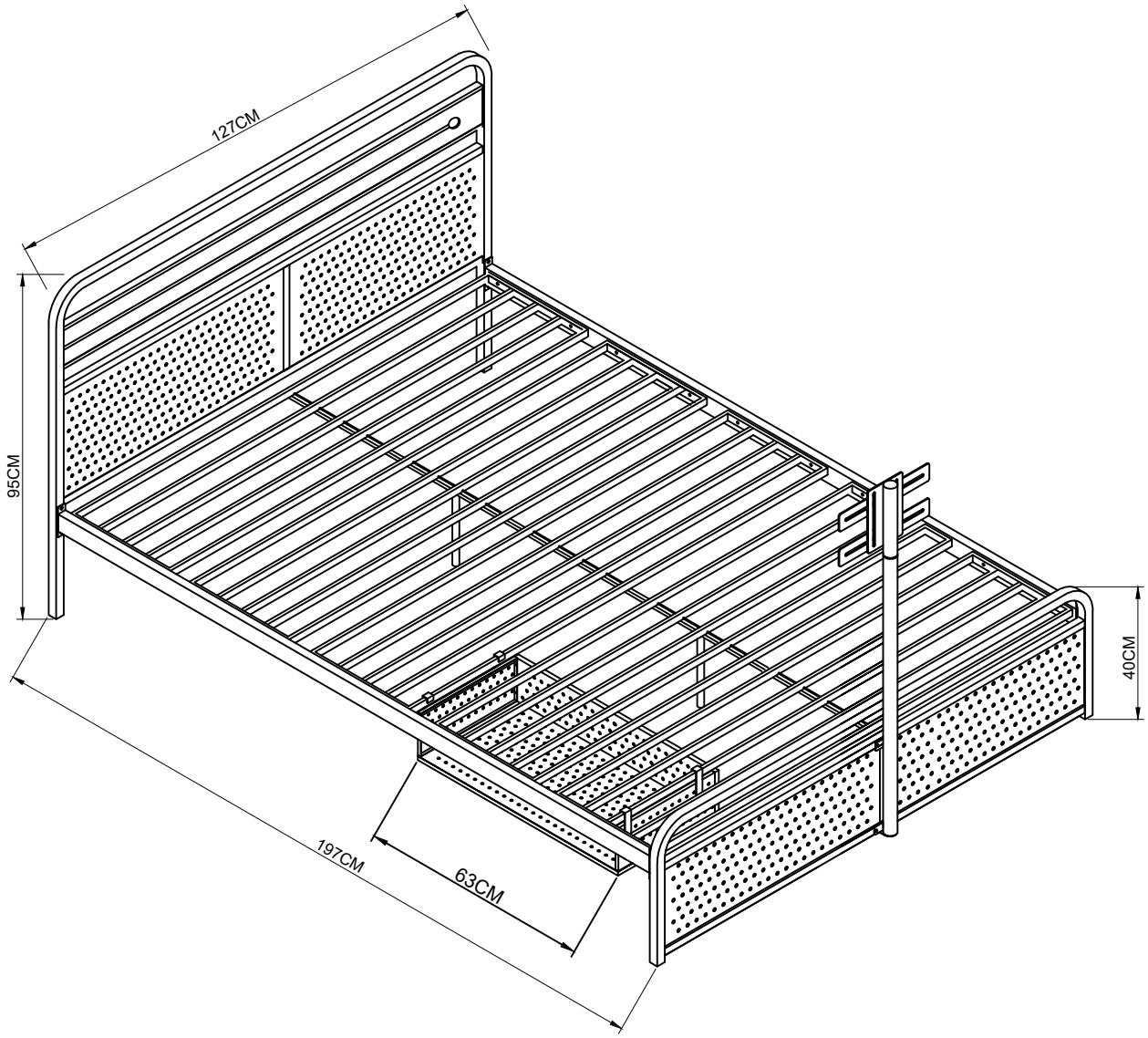
127CM
95CM
40CM
197CM
63CM