IMPORTANT! KEEP FOR FUTURE REFERENCE

SOLACE+CO

Remington 3 Drawer Chest

Assembly Instructions

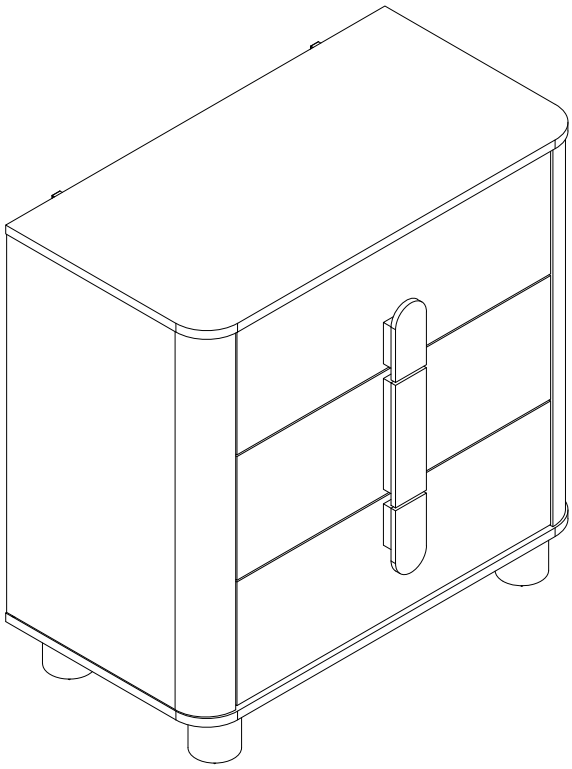

Manufacturer: FLAIR FURNITURE LTD

Address: Oldfield Ln, Heckmondwike WF16 0JD

Contact Information: support@bedkingdom.co.uk 01924950108

EU REP

Contact Information: eucomply OÜ

Address: Pärnu mnt 139b-14 11317 Tallinn, Estonia

Contact Information: hello@eucompliancepartner.com +3375690241





⚠ **WARNING: Contains small parts – choking hazard.**

⚠ **WARNING: Plastic packaging may cause suffocation. Keep away from babies and young children.**

⚠ **WARNING: Keep away from open flames and other heat sources.**

⚠ **WARNING: Ensure adequate airflow and ventilation at all times to prevent damp and mould.**

⚠ **WARNING: Ensure all attachments are secure before use. Do not use if parts are loose or damaged.**

Tools required (Not Provided)



2 Person assembly recommend

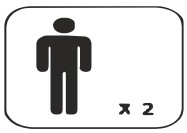



60min

(Approx) Set Up

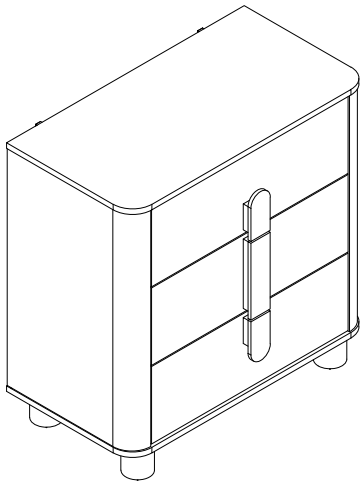

Hardwares List

A x29	**B x**29	**C x**33	**D x**38	**E x**36	**F x**8	**G x**12
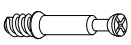 M6x35mm	 Ø15x9mm	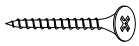 M4x40mm	 Ø6x30mm	 M3x12mm	 M3x14mm	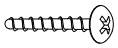 M4x35mm
H x8	**I x**2	**J x**2	**K x**8	**L x**4	**M x**2	**N x**1
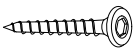 M5x45mm	 M4x12mm	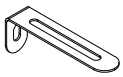		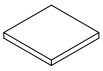 45x45x5mm	 Ø6x30mm	 M4mm
CL x3	**CR x**3	**DL x**3	**DR x**3			
 300mm	 300mm	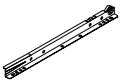 300mm	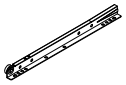 300mm			

Parts List

Carton 1 of 2			Carton 2 of 2		
NO.	Part List	QTY	NO.	Part List	QTY
1	TOP PANEL	1	3	SIDE PANEL-LEFT	1
2	BOTTOM PANEL	1	4	SIDE PANEL-RIGHT	1
5	SUPPORT POST	2	6	SUPPORT BAR	6
7	BACK PANEL	1	10	LEG	4
8	BACK PANEL SUPPORT RAIL	1	14	DRAWER HANDLE	2
9	BACK PANEL	1	15	DRAWER HANDLE	1
11	DRAWER TOP FRONT	1	16	DRAWER SIDE PANEL-LEFT	3
12	DRAWER MIDDLE FRONT	1	17	DRAWER SIDE PANEL-RIGHT	3
13	DRAWER BOTTOM FRONT	1	18	DRAWER BACK PANEL	3
			19	DRAWER BOTTOM PANEL	3
			20	DRAWER SUPPORT PANEL	3

Parts List

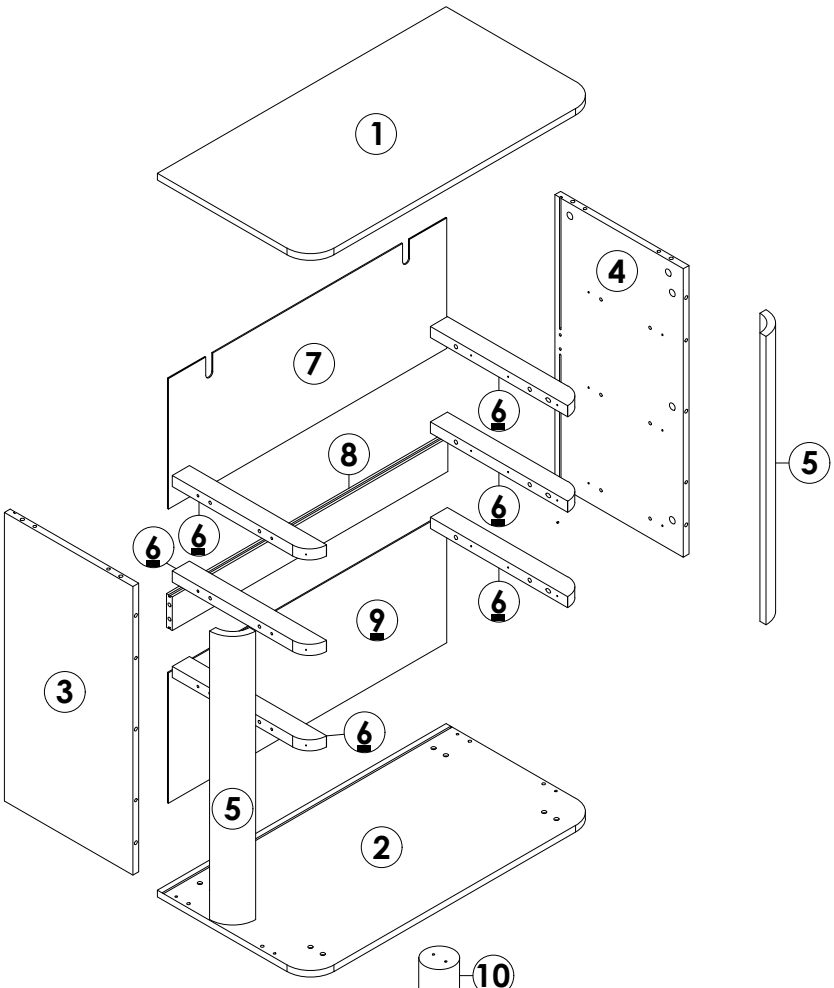

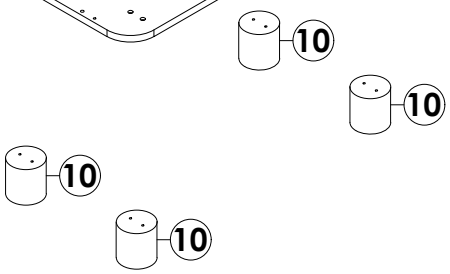

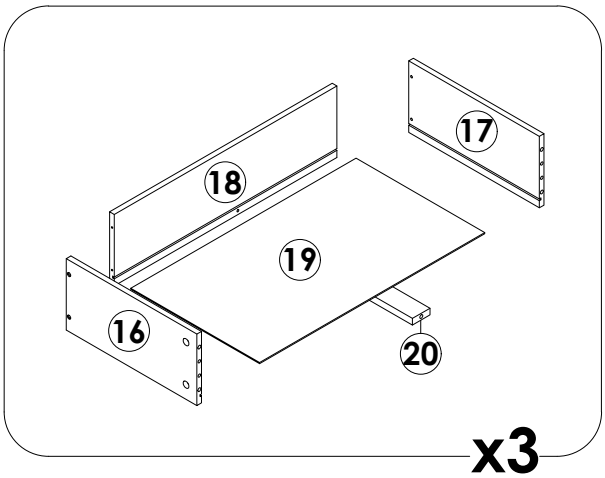

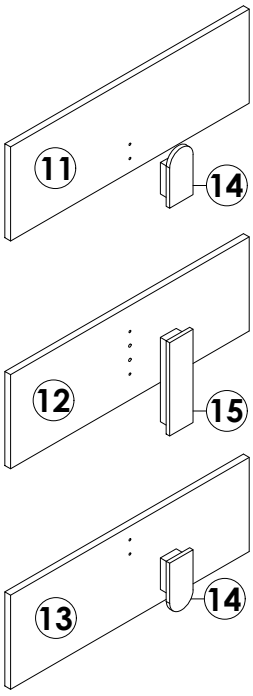

STEP 1

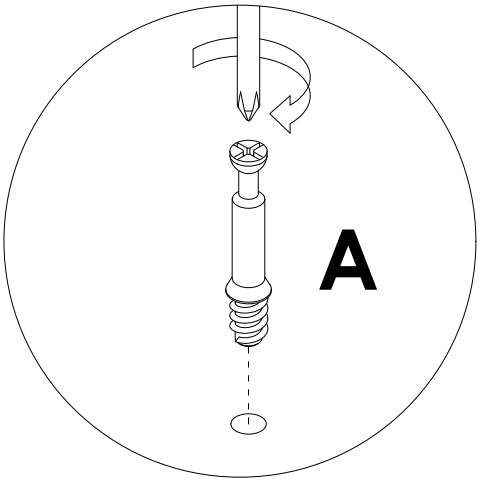

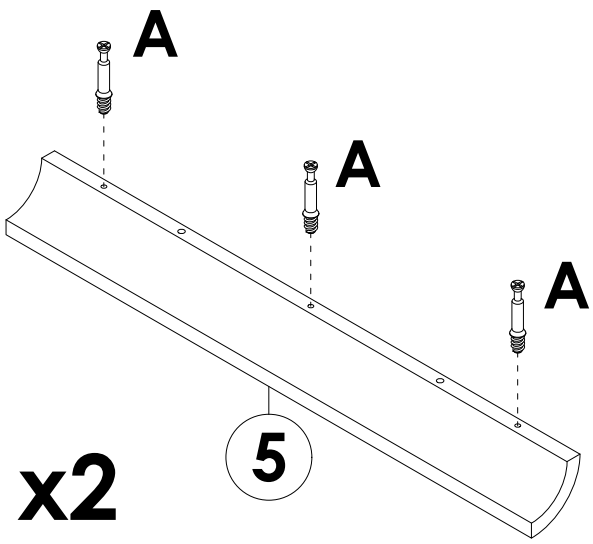

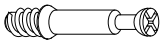

A x 6PCS

STEP 2

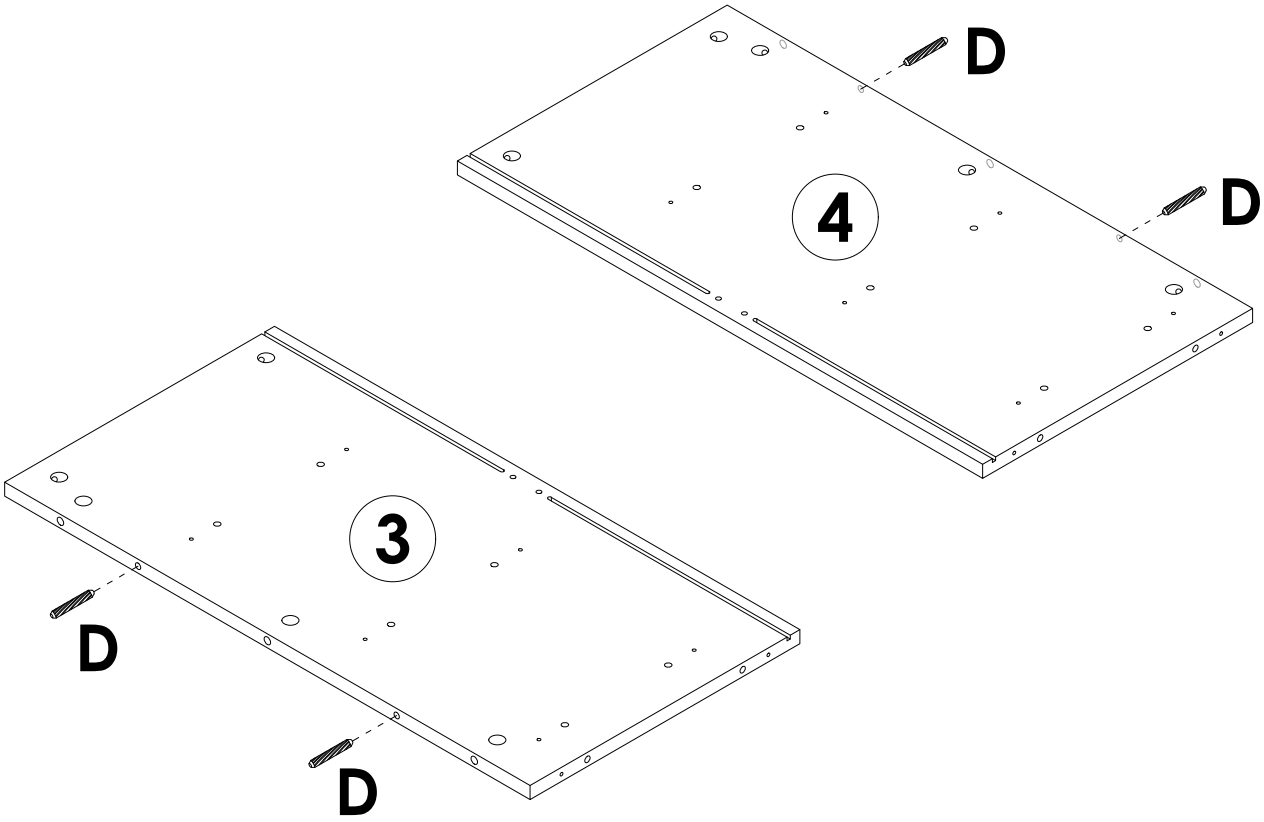



D x 4PCS

STEP 3

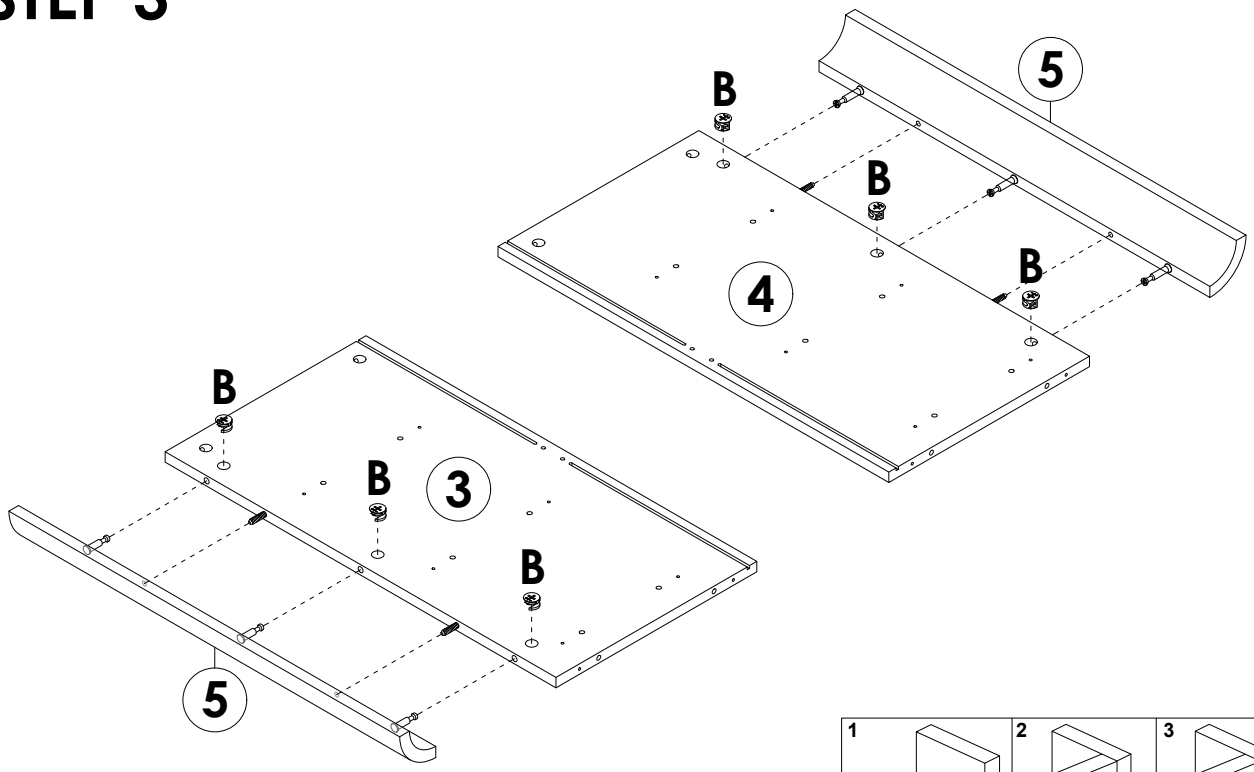

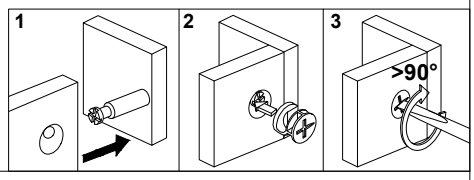

	**B** x 6PCS

STEP 4

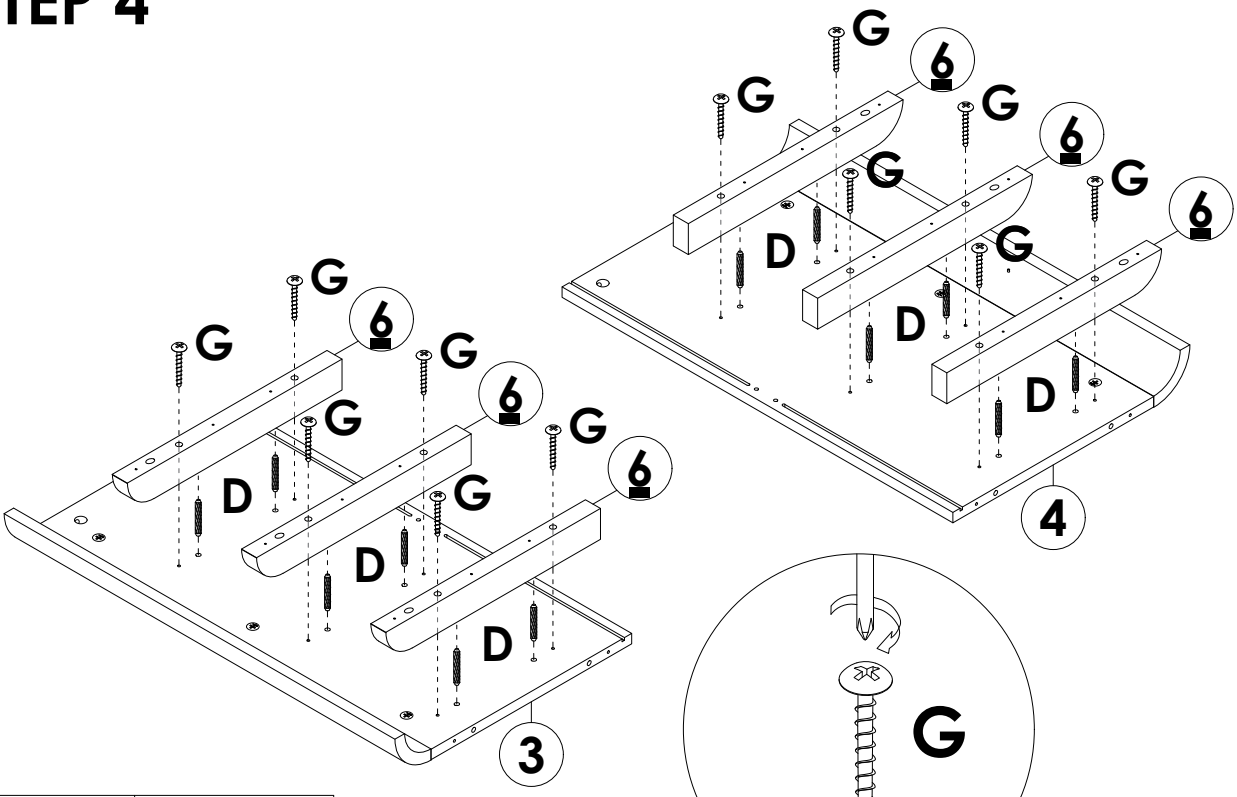

	**D** x 12PCS
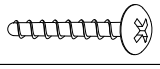	**G** x 12PCS

STEP 5

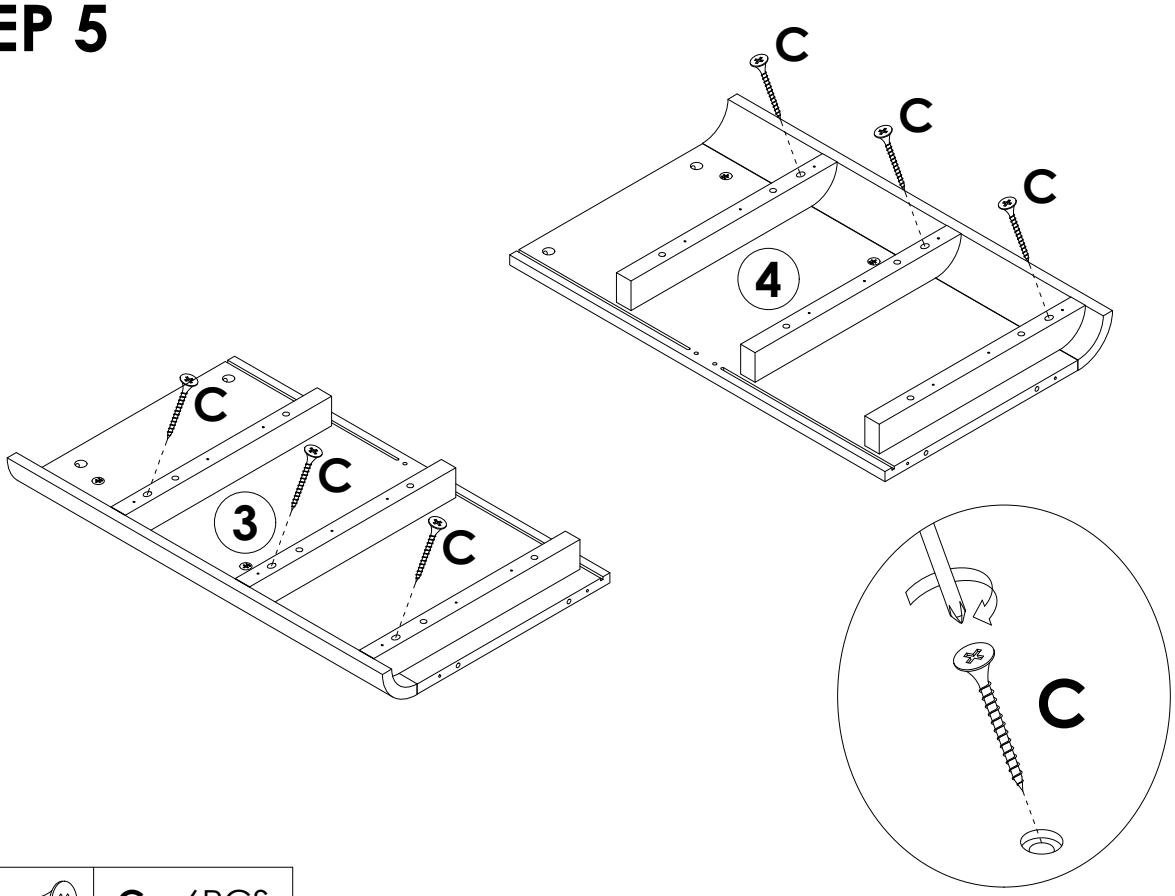

	**C** x 6PCS

STEP 6

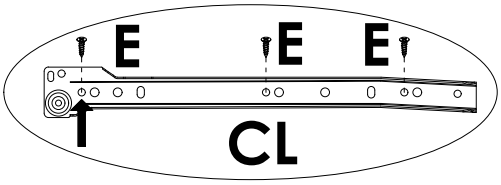

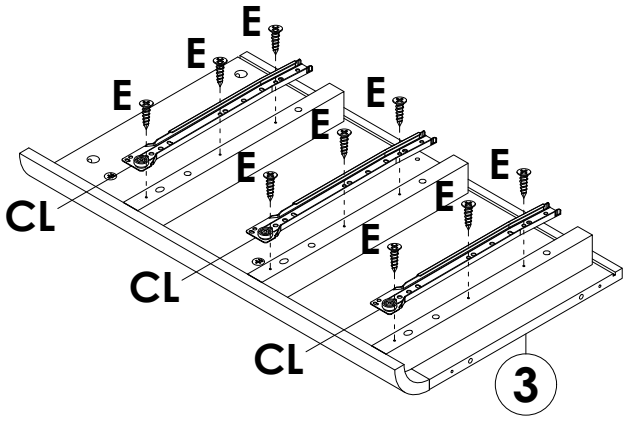

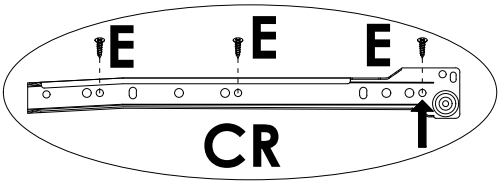

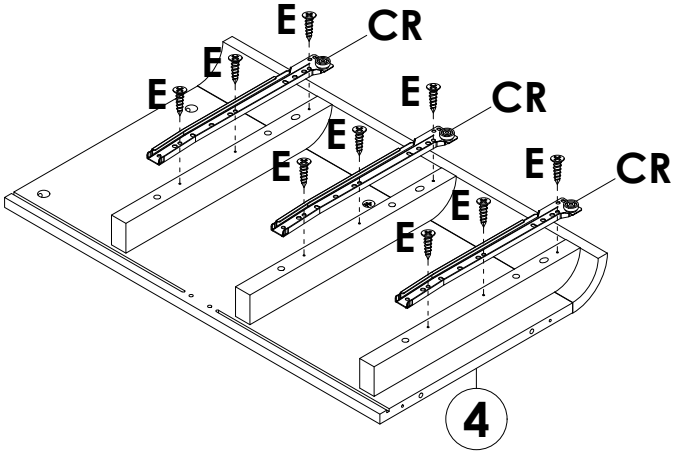

	**E** x 18PCS
	**CL** x 3PCS
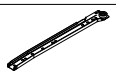	**CR** x 3PCS

STEP 7

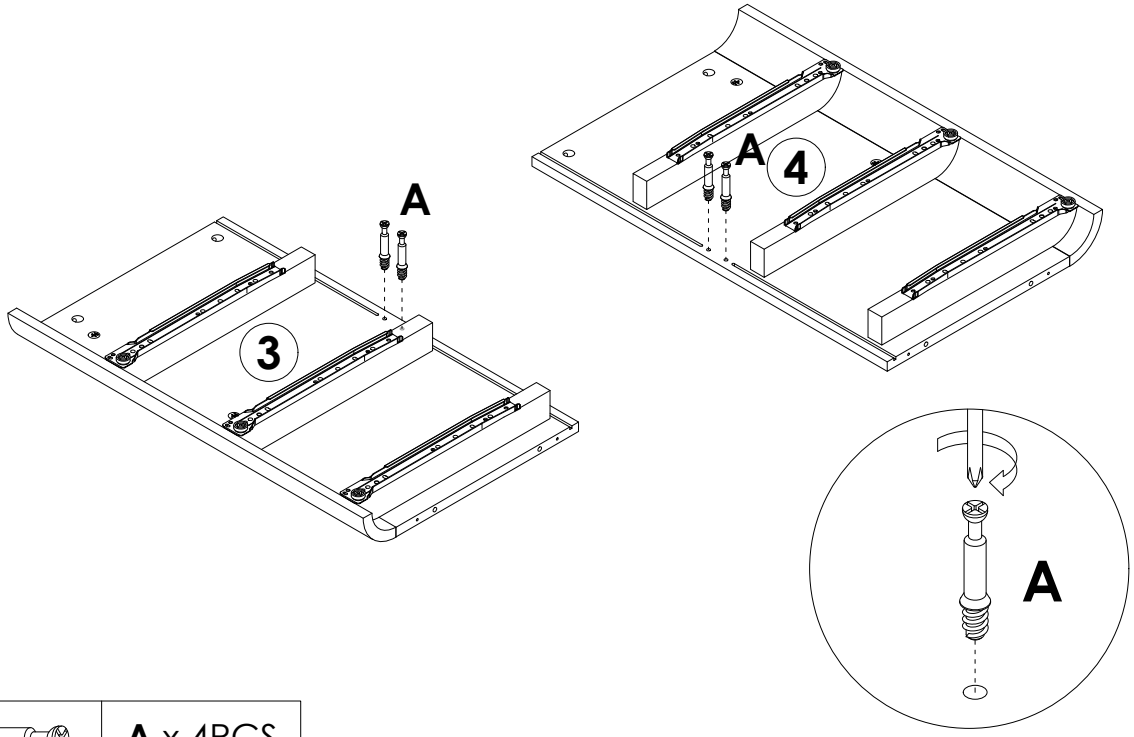

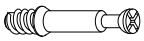 **A** x 4PCS

STEP 8

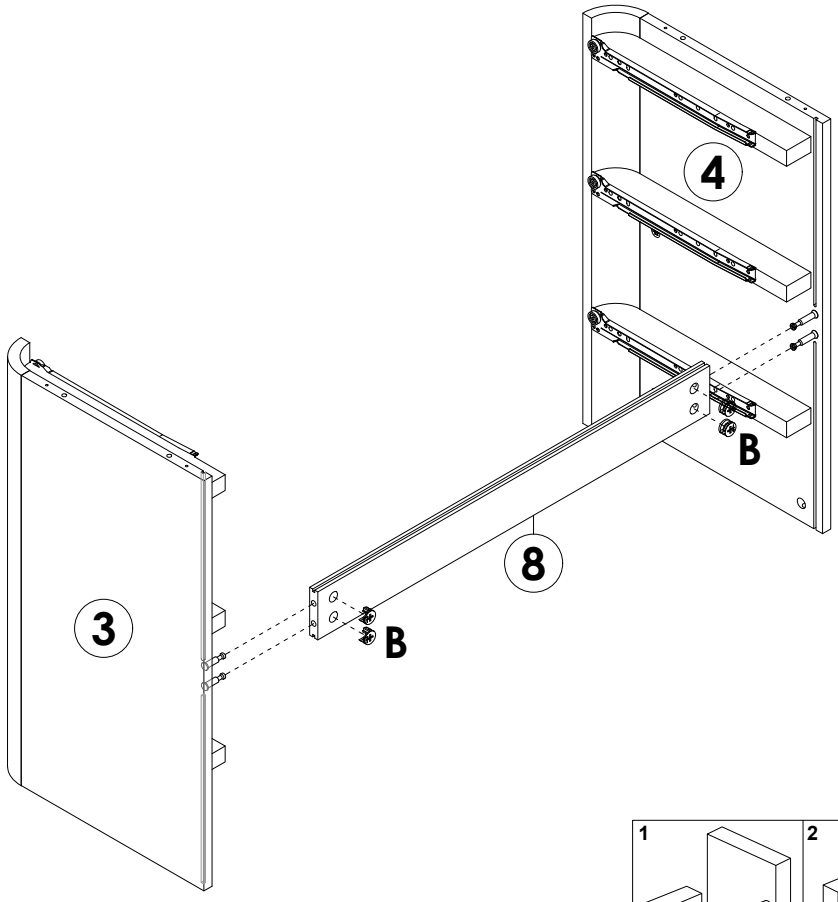

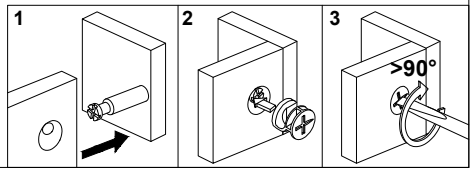

 **B** x 4PCS

STEP 9

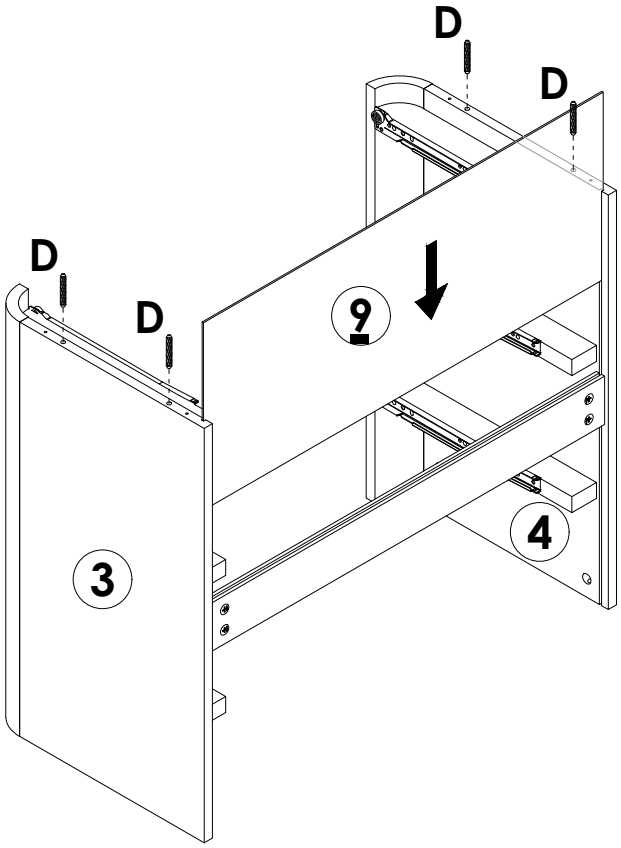

	**D** x 4PCS

STEP 10

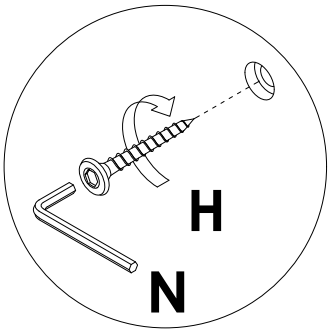

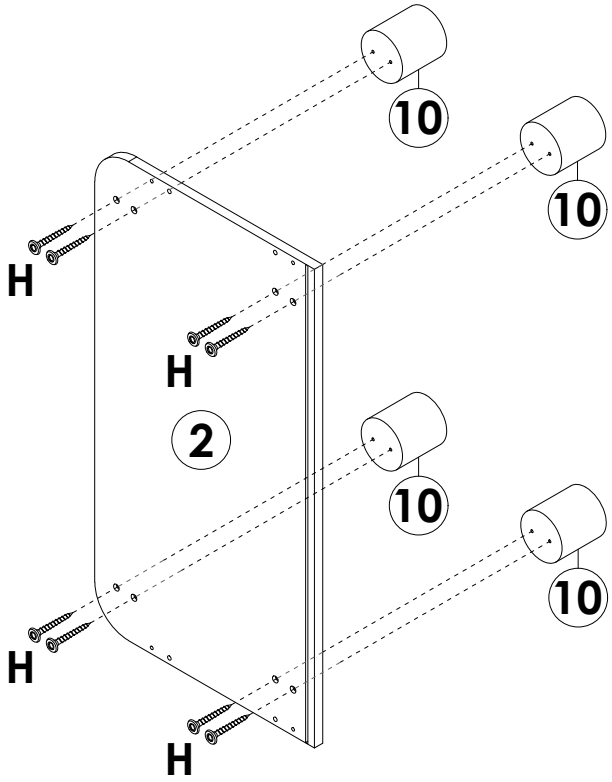

	**H** x 8PCS
	**N** x 1PC

STEP 11

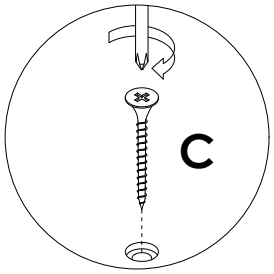

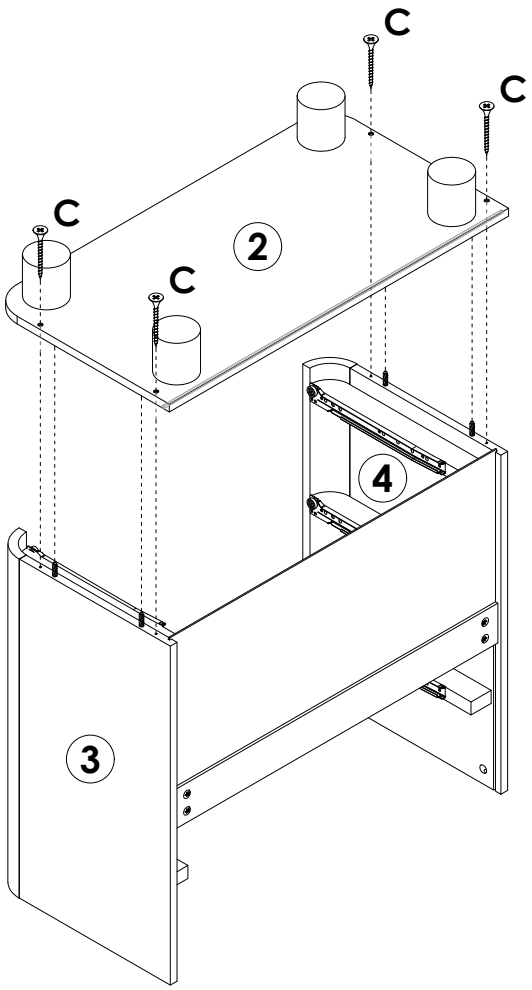

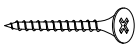	**C** x 4PCS

STEP 12

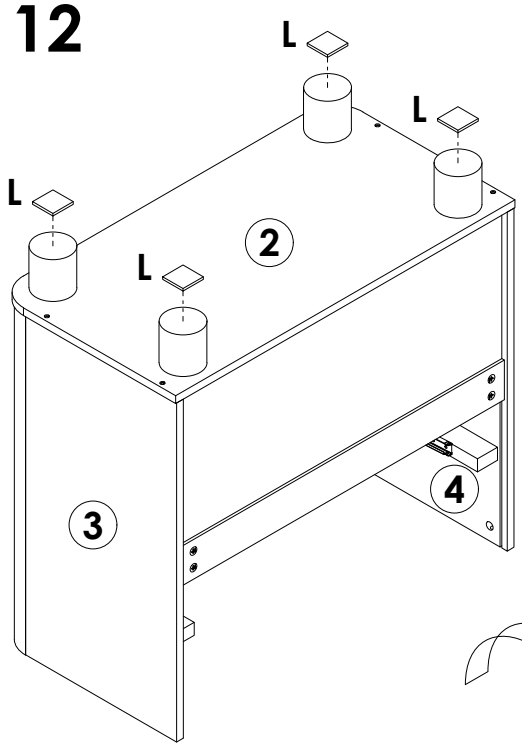

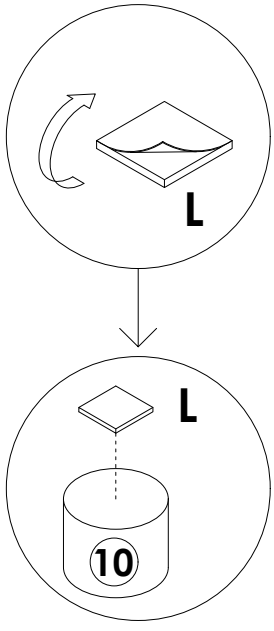

180°

	**L** x 4PCS

STEP 13

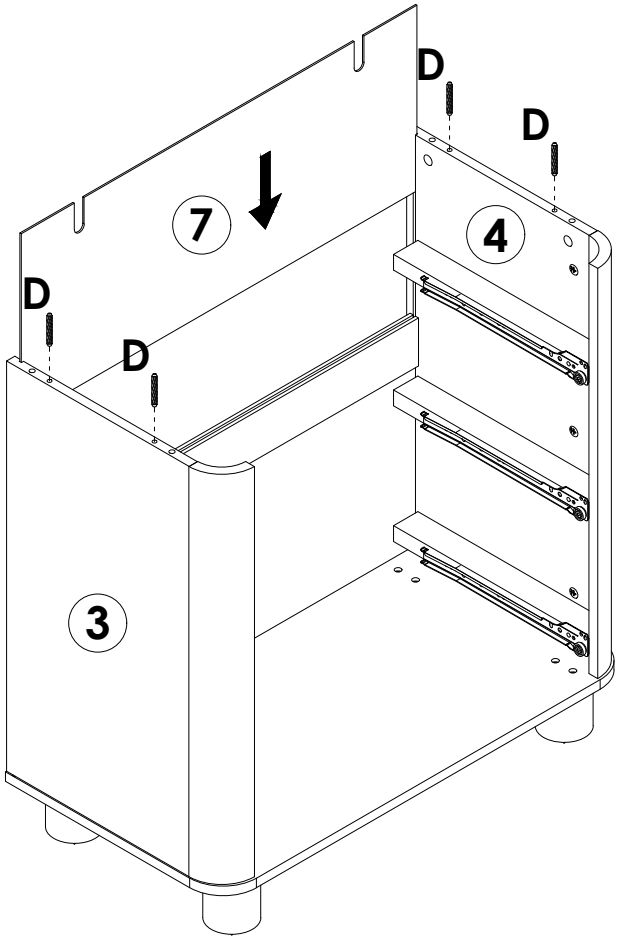

	**D** x 4PCS

STEP 14

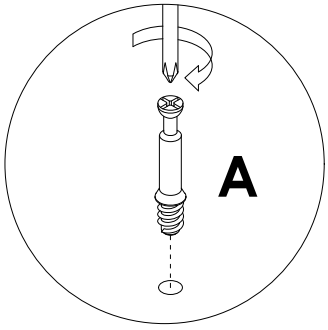

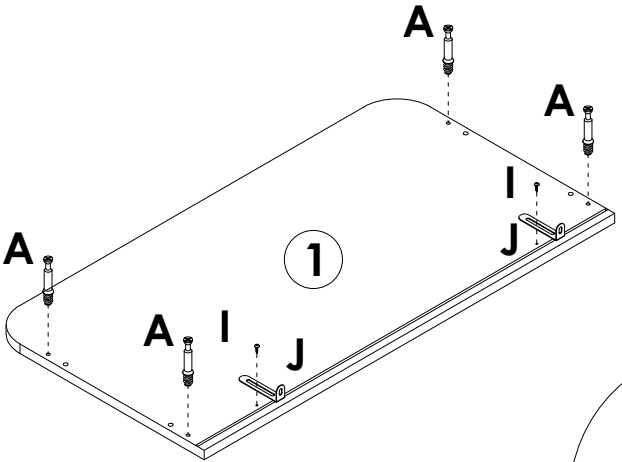

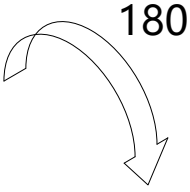

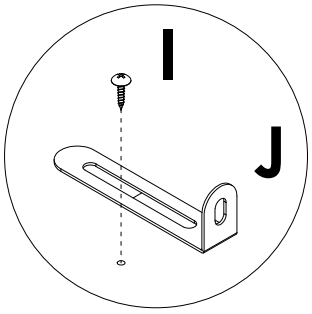

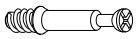	**A** x 4PCS
	**I** x 2PCS
	**J** x 2PCS

STEP 15

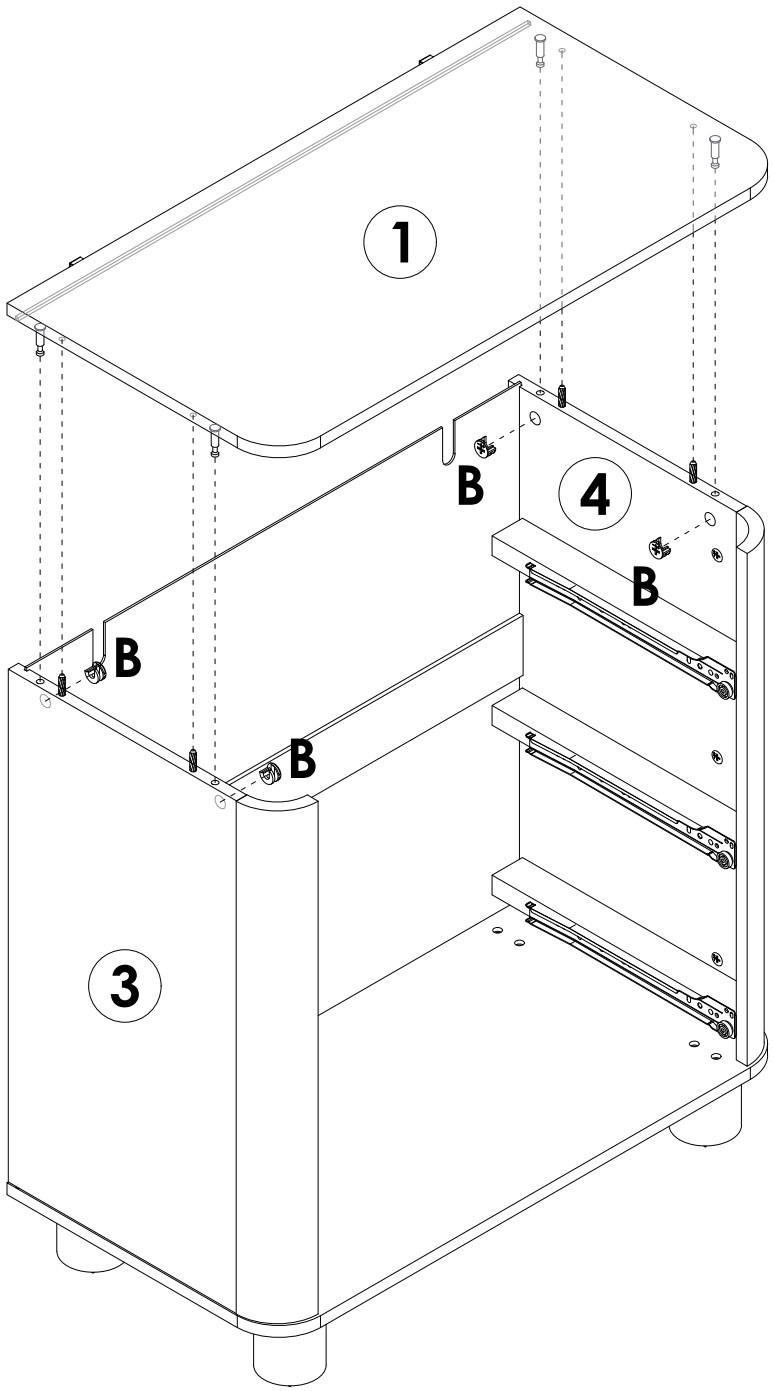

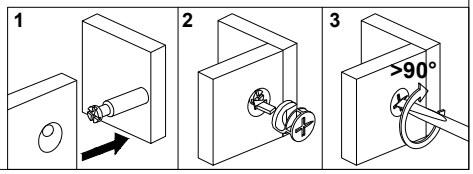

	**B** x 4PCS

STEP 16

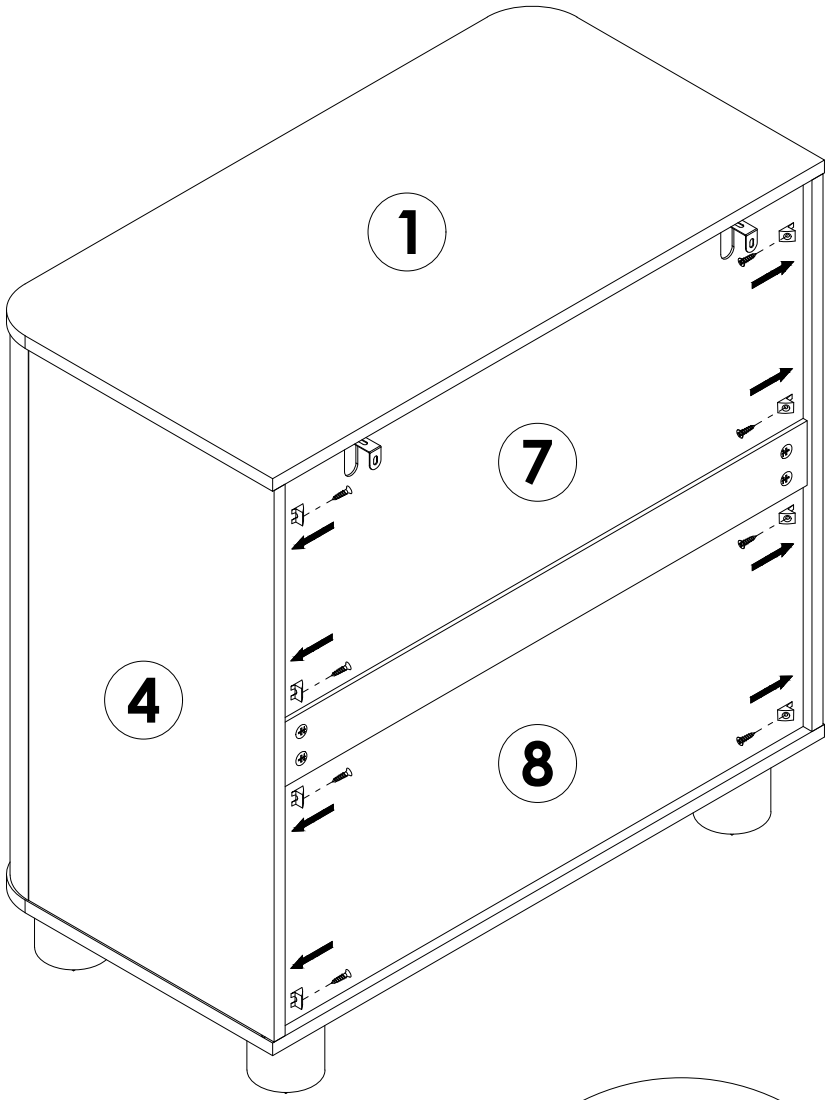

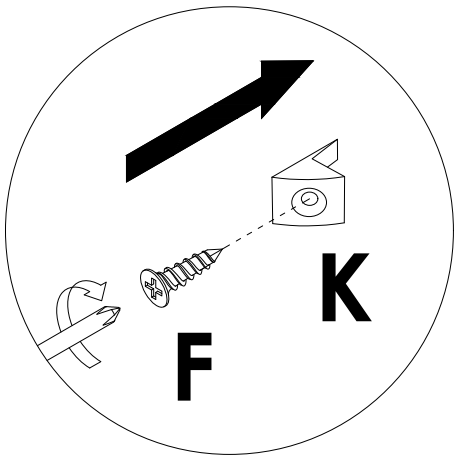

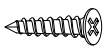	**F** x 8PCS
	**K** x 8PCS

STEP 17

WALL





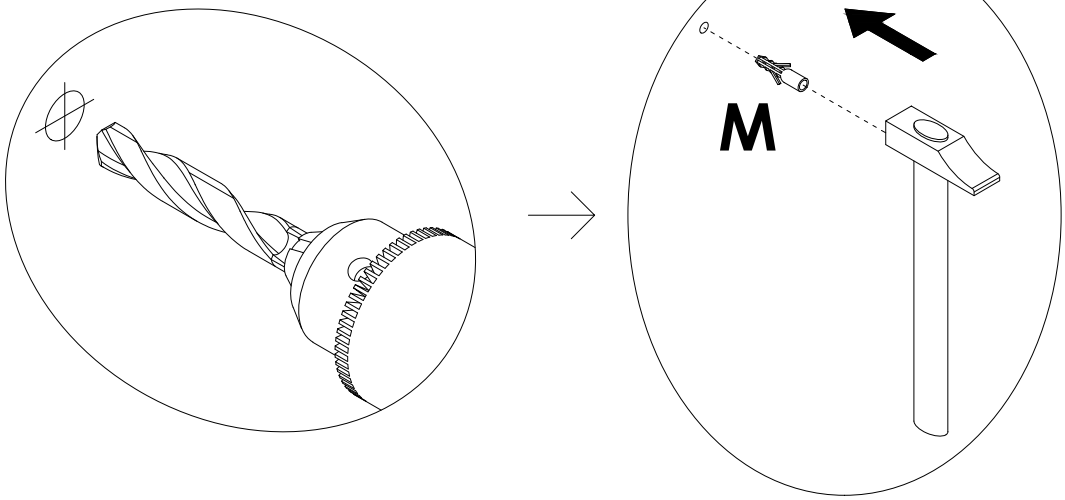

	**M** x 2PCS

STEP 18

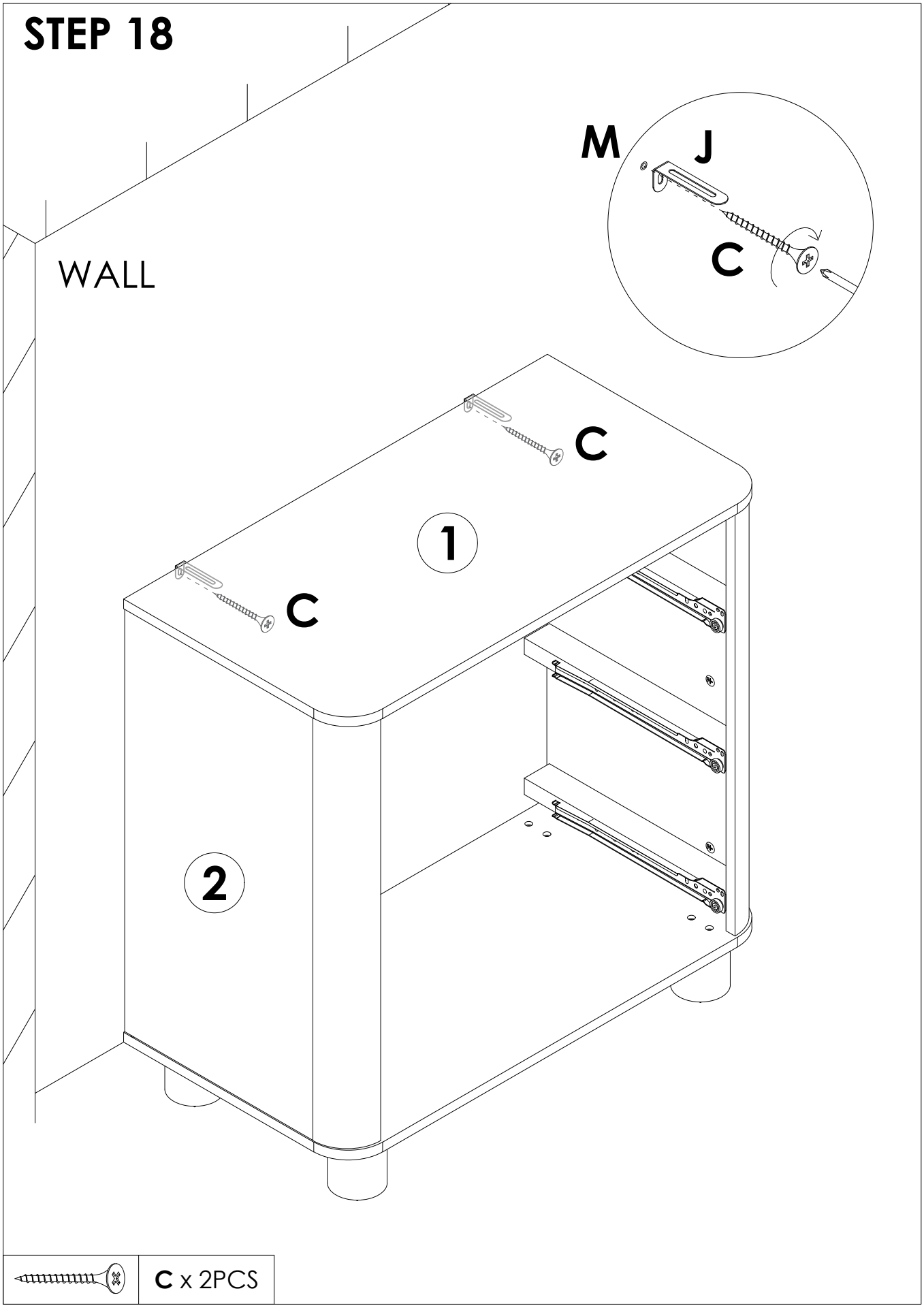

	C x 2PCS

STEP 19

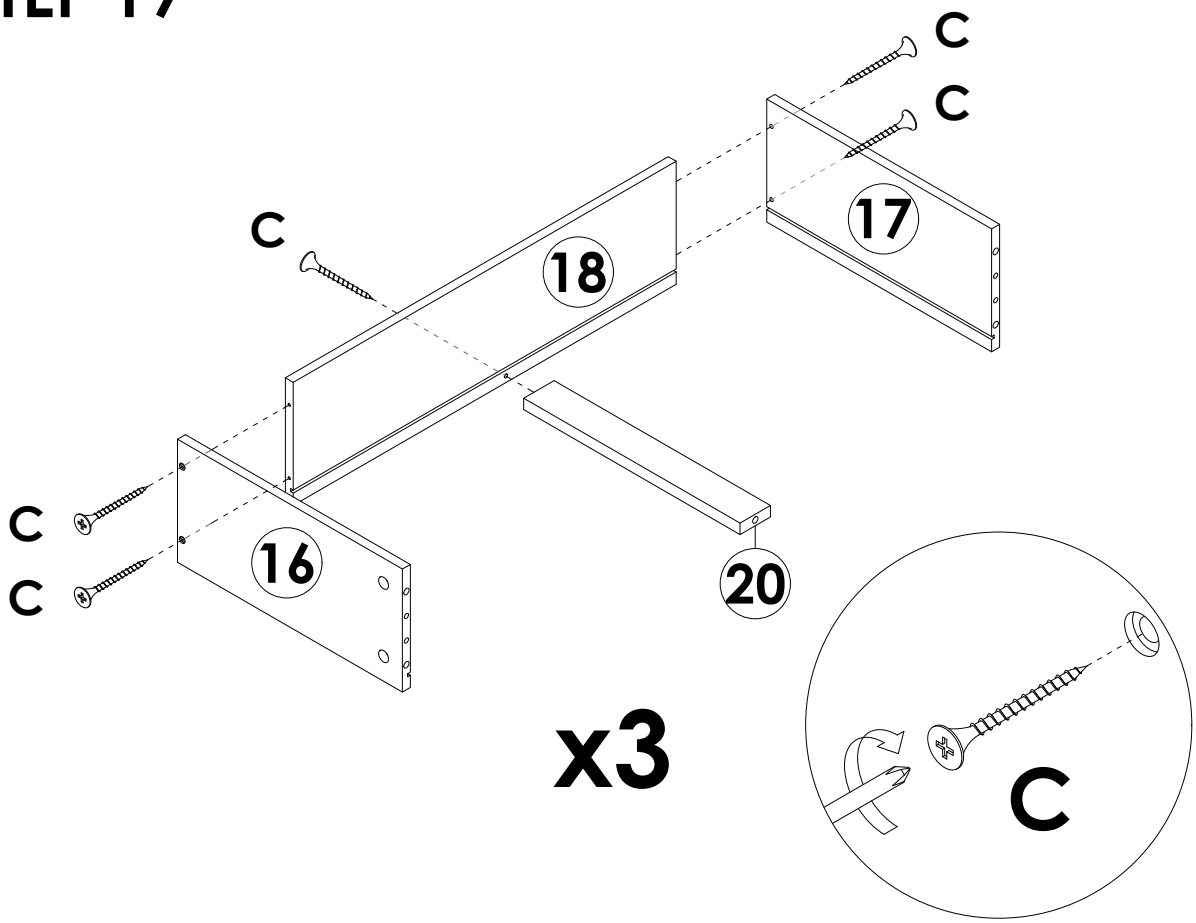



C x 15PCS

STEP 20

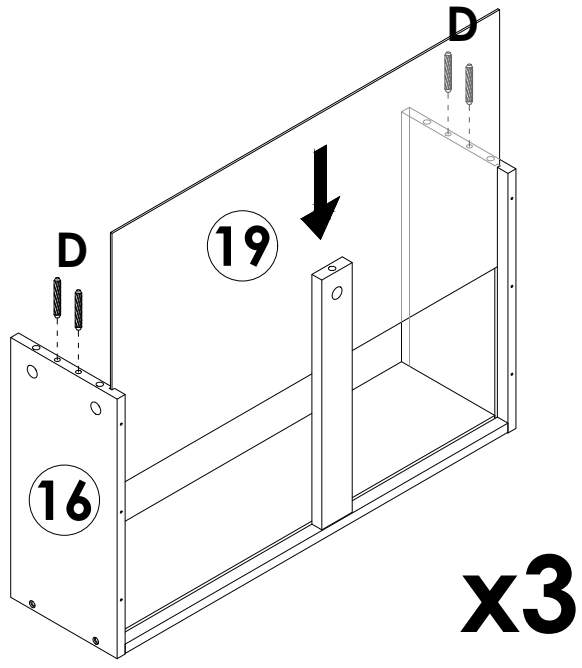



D x 12PCS

STEP 21

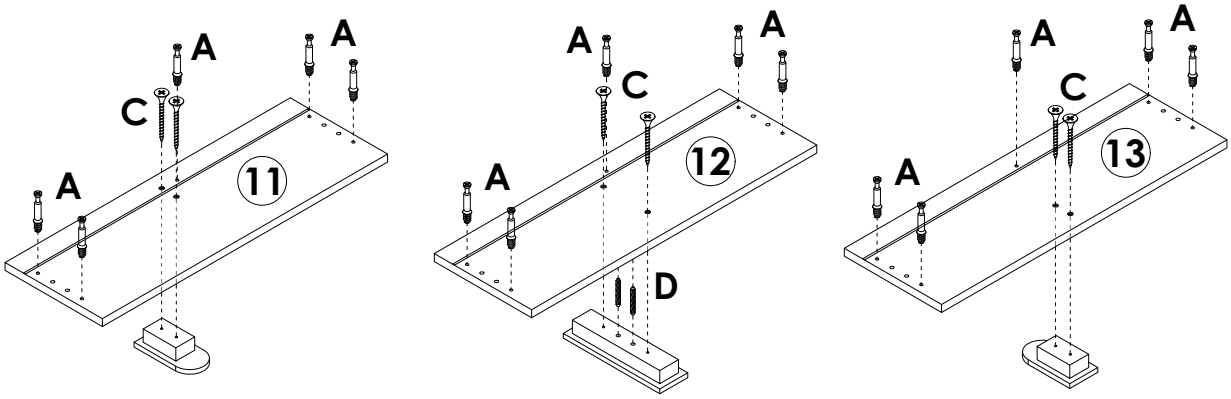

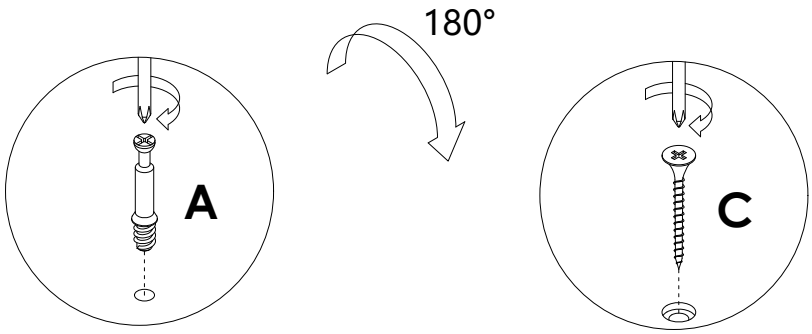

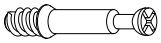	**A** x 15PCS
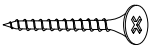	**C** x 6PCS
	**D** x 2PCS

STEP 22

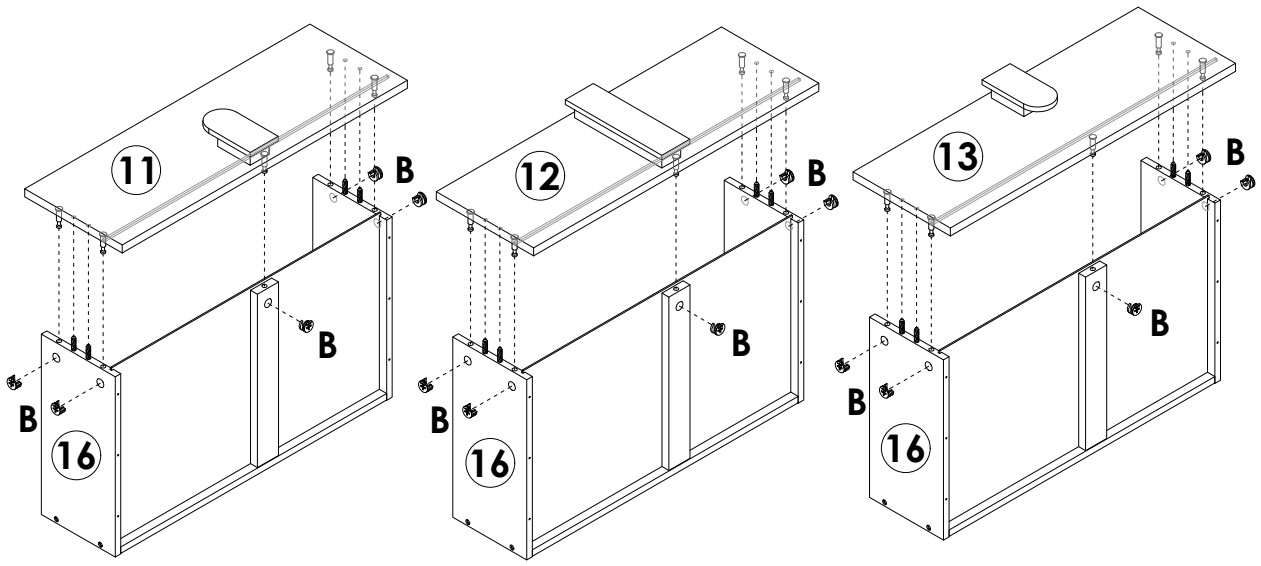

	**B** x 15PCS

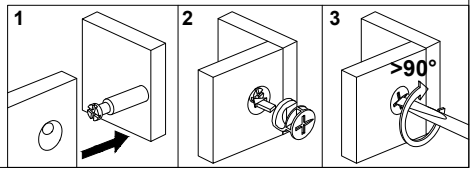

STEP 23

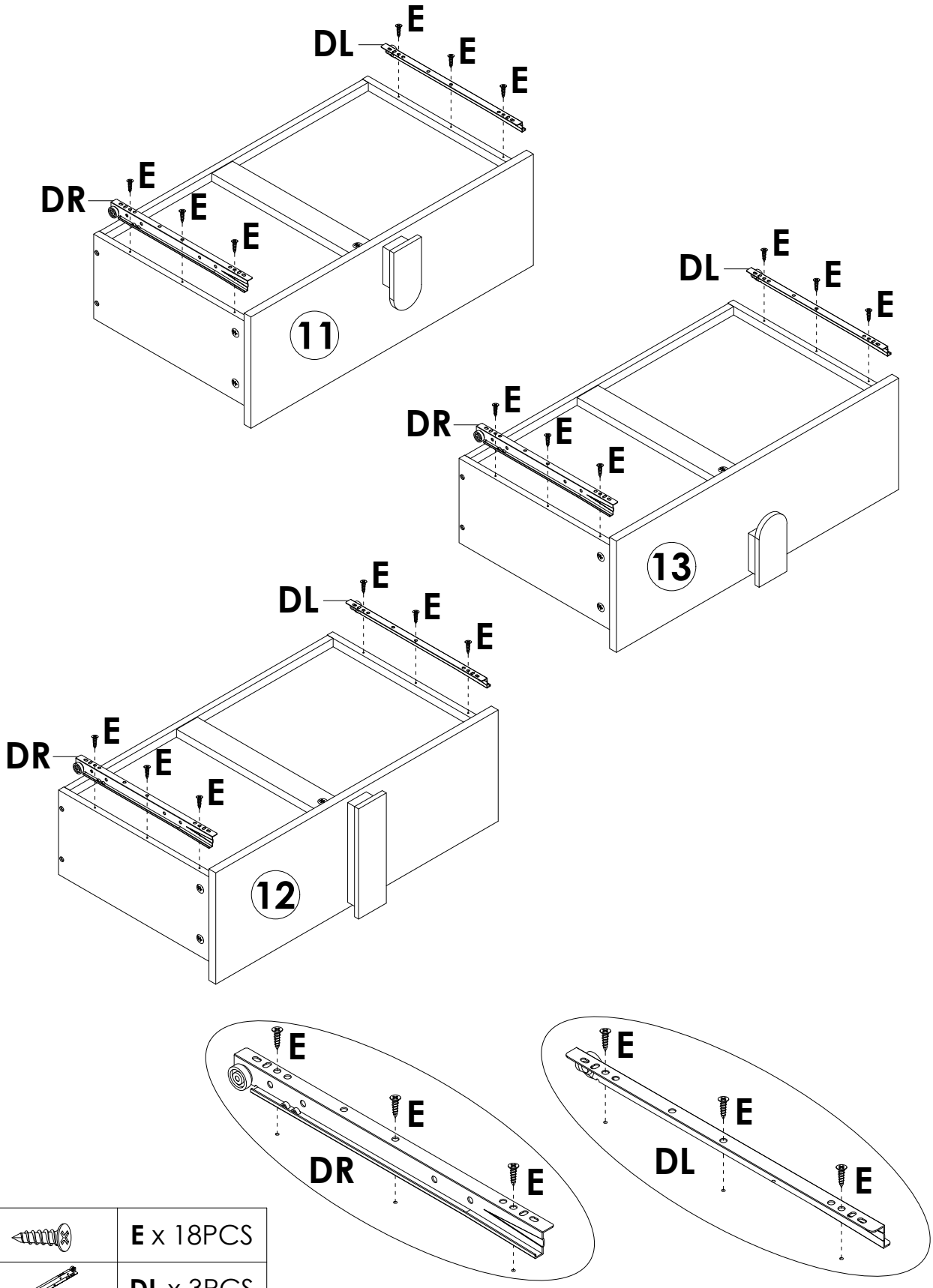

	E x 18PCS
	DL x 3PCS
	DR x 3PCS

STEP 24

