IMPORTANT! KEEP FOR FUTURE REFERENCE

SOLACE+CO

Remington 2 Door Sideboard

Assembly Instructions

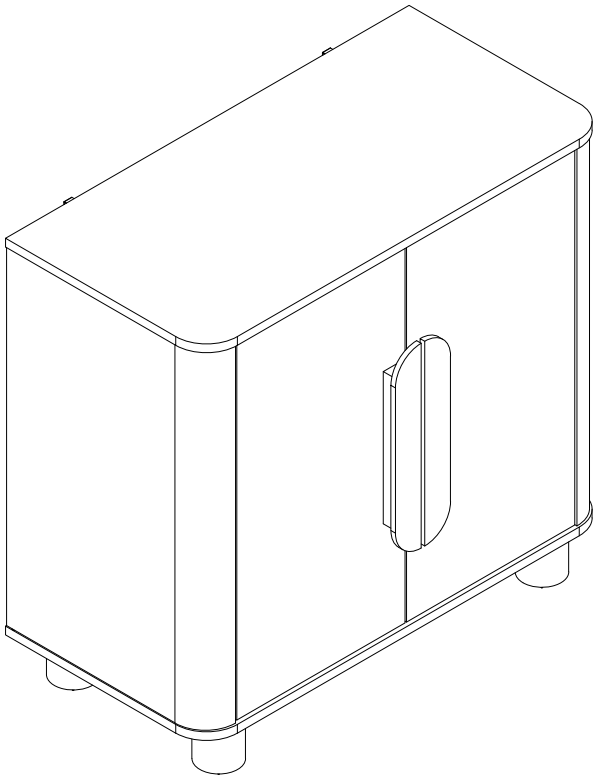

Manufacturer: FLAIR FURNITURE LTD

Address: Oldfield Ln, Heckmondwike WF16 0JD

Contact Information: support@bedkingdom.co.uk
01924950108

EU REP

Contact Information: eucomply OÜ

Address: Pärnu mnt 139b-14 11317 Tallinn, Estonia

Contact Information: hello@eucompliancepartner.com
+3375690241





⚠ **WARNING: Contains small parts – choking hazard.**

⚠ **WARNING: Plastic packaging may cause suffocation. Keep away from babies and young children.**

⚠ **WARNING: Keep away from open flames and other heat sources.**

⚠ **WARNING: Ensure adequate airflow and ventilation at all times to prevent damp and mould.**

⚠ **WARNING: Ensure all attachments are secure before use. Do not use if parts are loose or damaged.**

Tools required (Not Provided)



2 Person assembly recommend

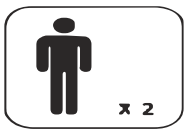



60min

(Approx) Set Up

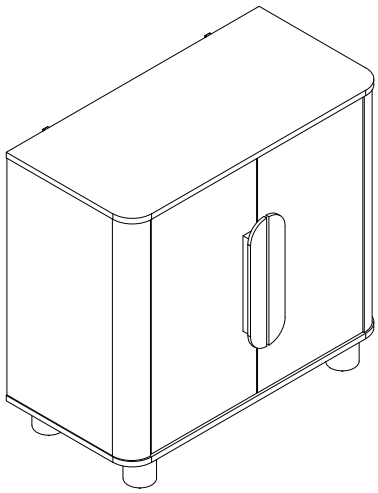

Hardwares List

A x14	**B x**14	**C x**14	**D x**12	**E x**2	**F x**8	**G x**16
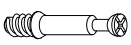 M6x35mm	 Ø15x9mm	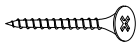 M4x40mm	 Ø6x30mm	 M3.5x16mm	 M3x14mm	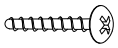 M4x35mm
H x8	**I x**24	**J x**4	**K x**1	**L x**4	**M x**2	**N x**2
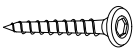 M5x45mm	 M3.5x12mm	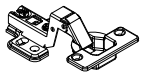 Ø35mm	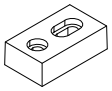	 Ø5x20mm	 M4x12mm	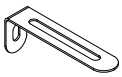
O x8	**P x**4	**Q x**2	**R x**1			
	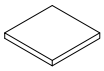 45x45x5mm	 Ø6x30mm	 M4mm			

Parts List

Carton 1					
NO.	Part List	QTY	NO.	Part List	QTY
1	TOP PANEL	1	11	LEG	4
2	BOTTOM PANEL	1	12	DRAWER HANDLE	2
3	SIDE PANEL - LEFT	1	13	DRAWER BOTTOM FRONT	2
4	SIDE PANEL - RIGHT	1			2
5	SUPPORT POST	2			
6	SUPPORT BAR	4			
7		1			
8	BACK PANEL	1			
9	BACK PANEL SUPPORT RAIL	1			
10	BACK PANEL	1			

Parts List

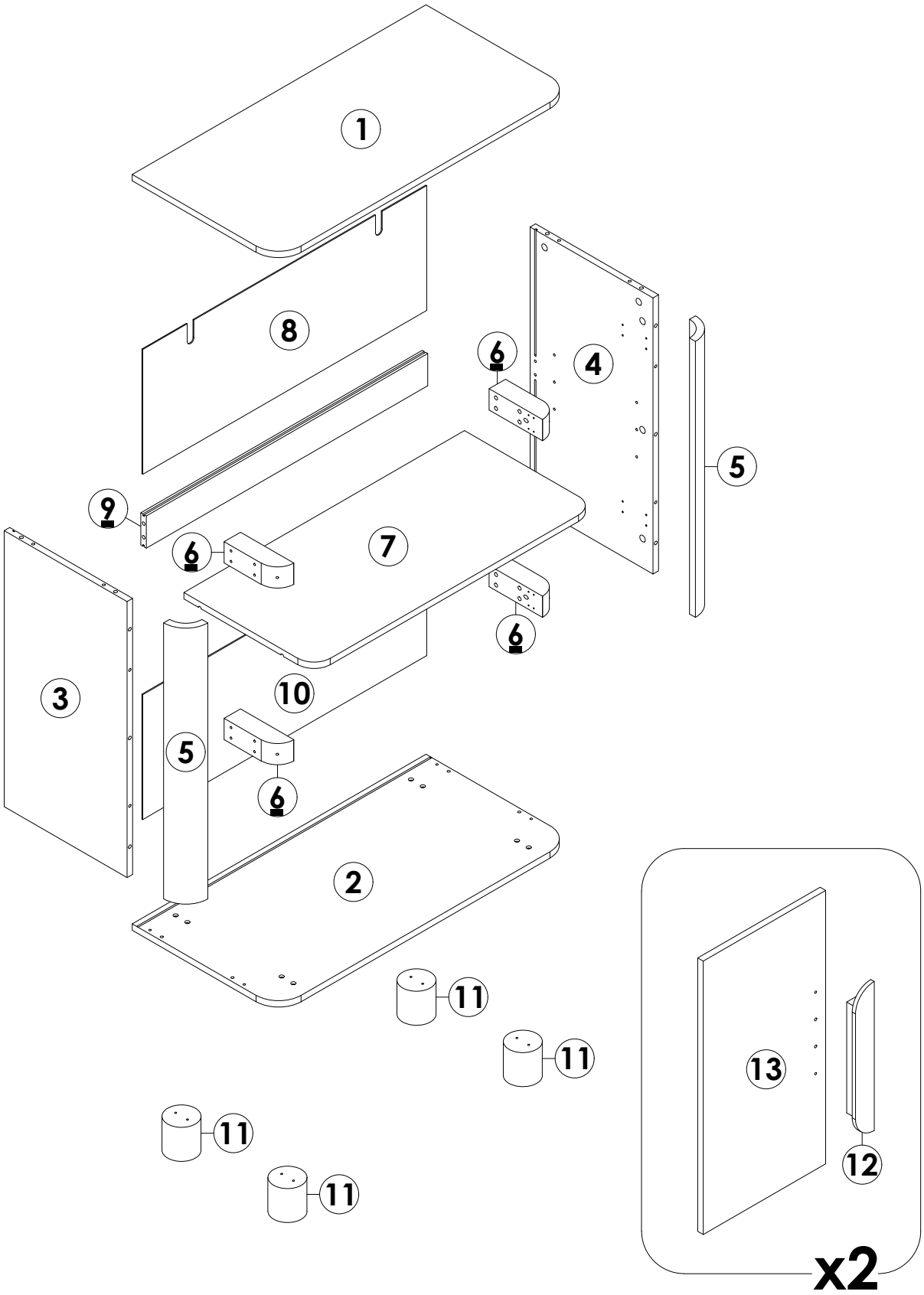

STEP 1

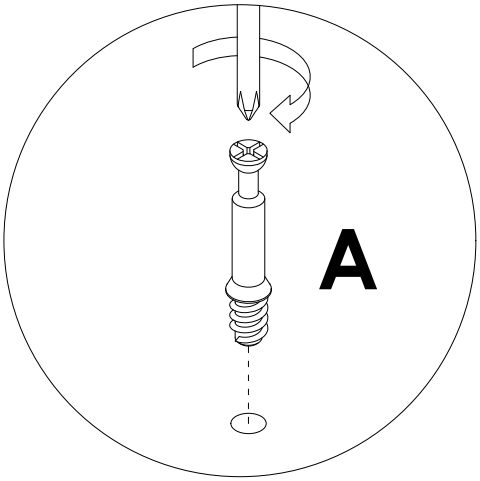

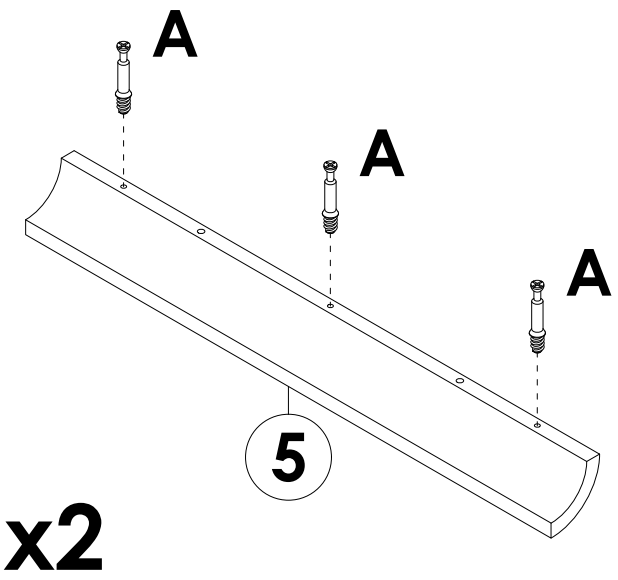

x2

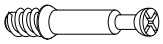

A x 6PCS

STEP 2

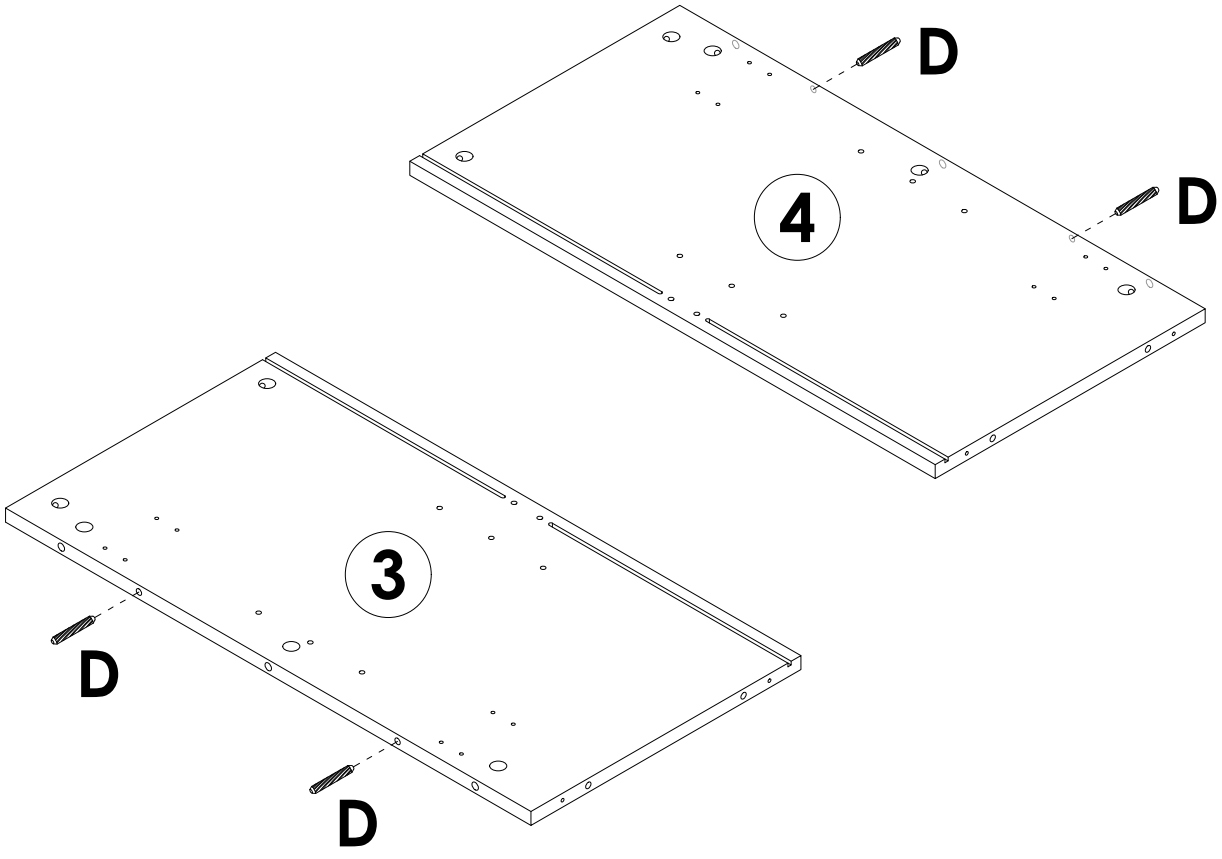



D x 4PCS

STEP 3

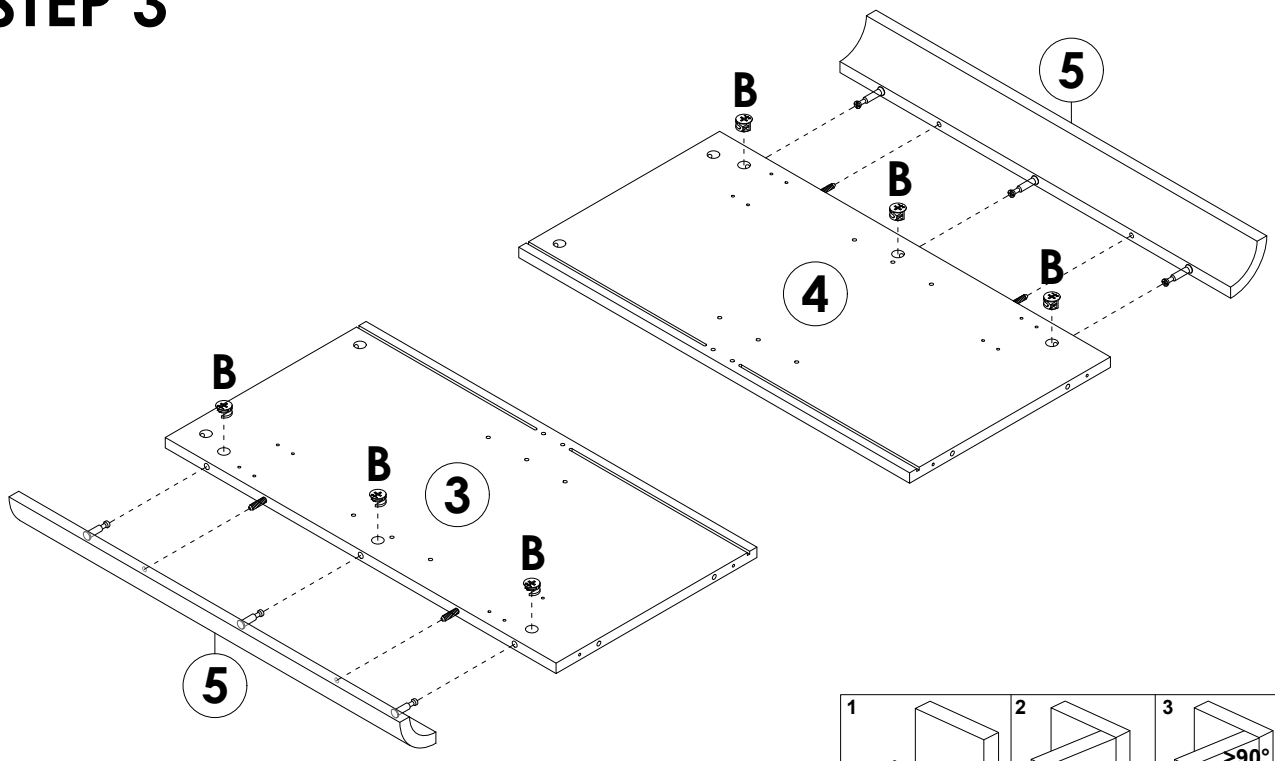

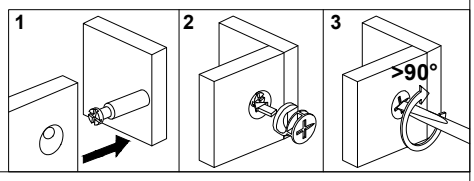



B x 6PCS

STEP 4

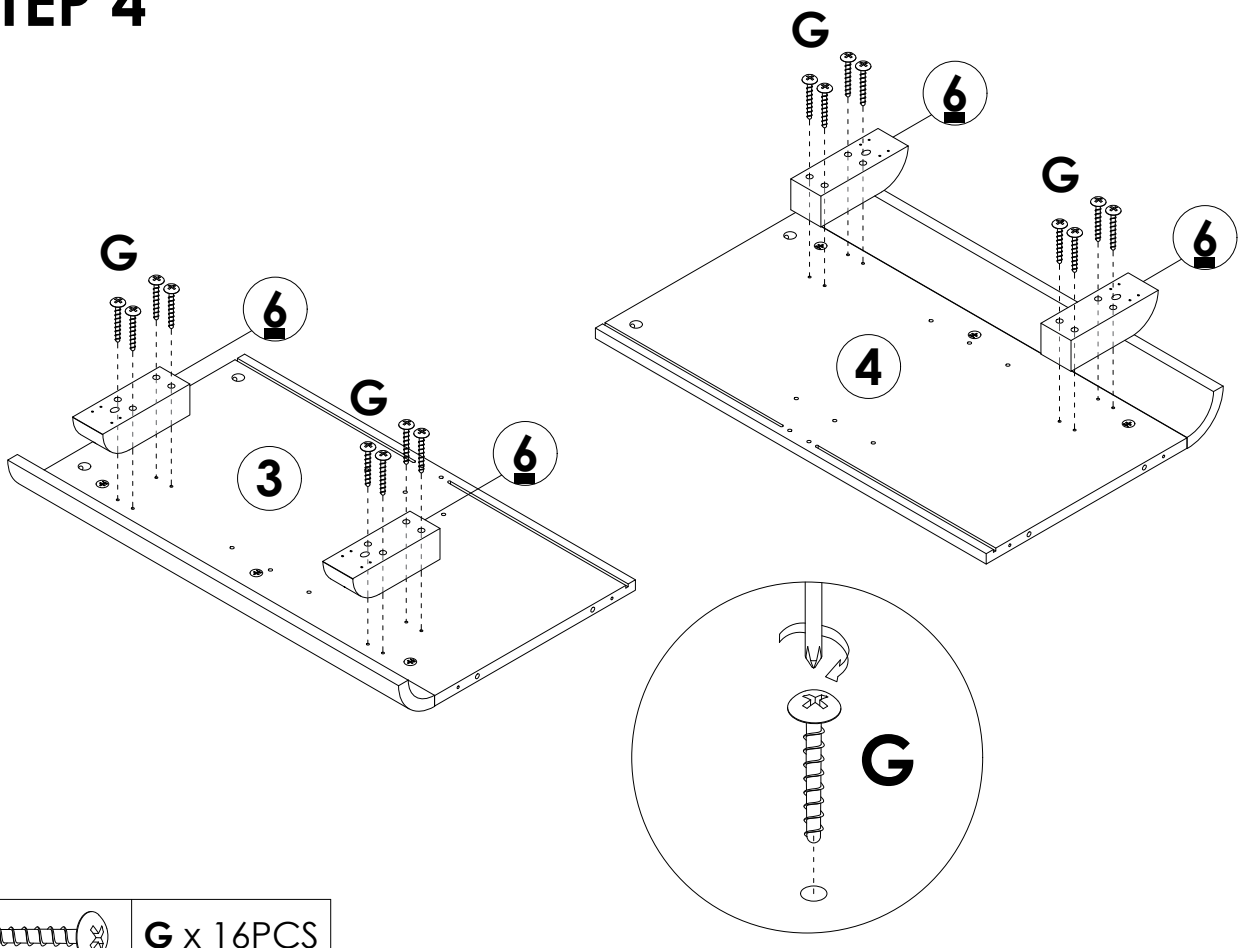

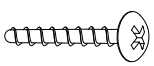

G x 16PCS

STEP 5

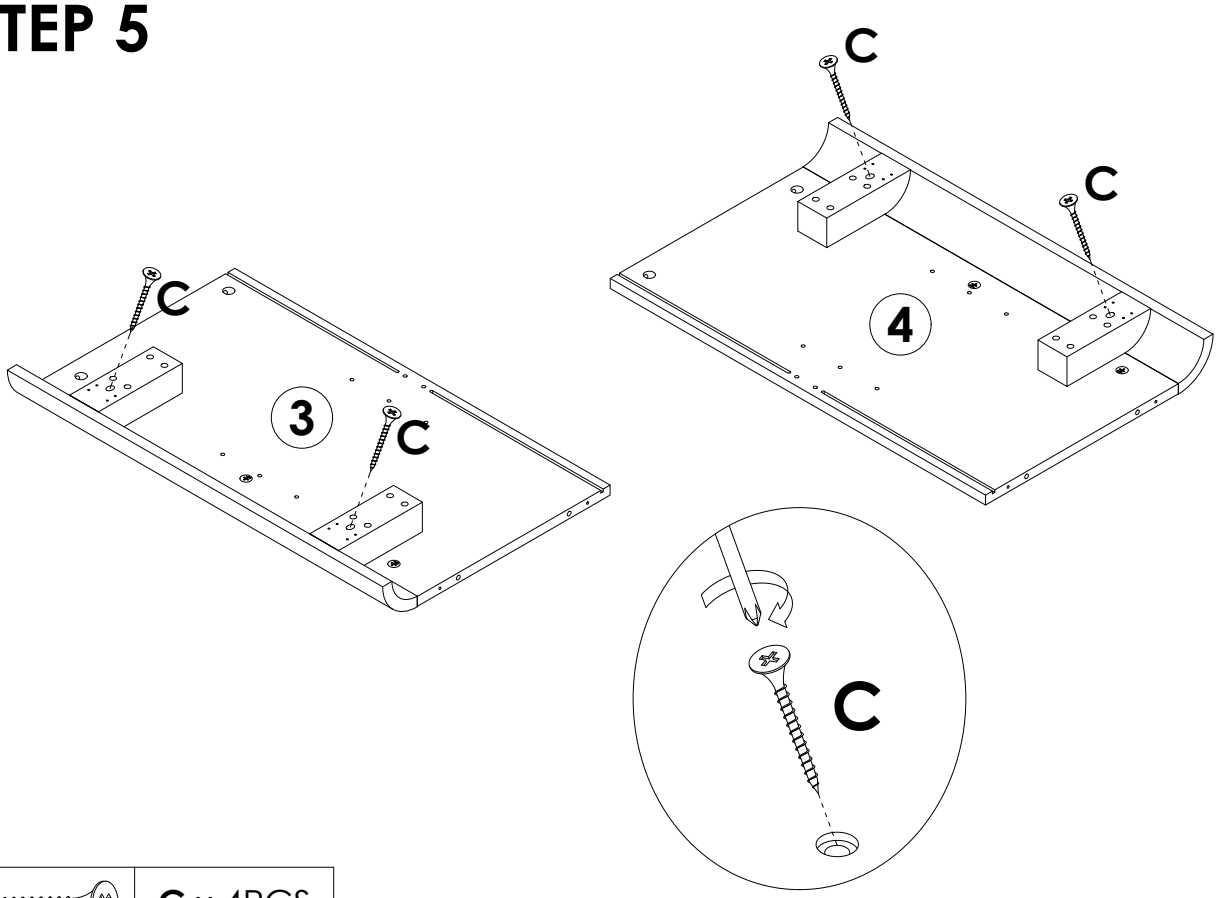

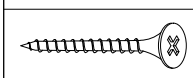

C x 4PCS

STEP 6

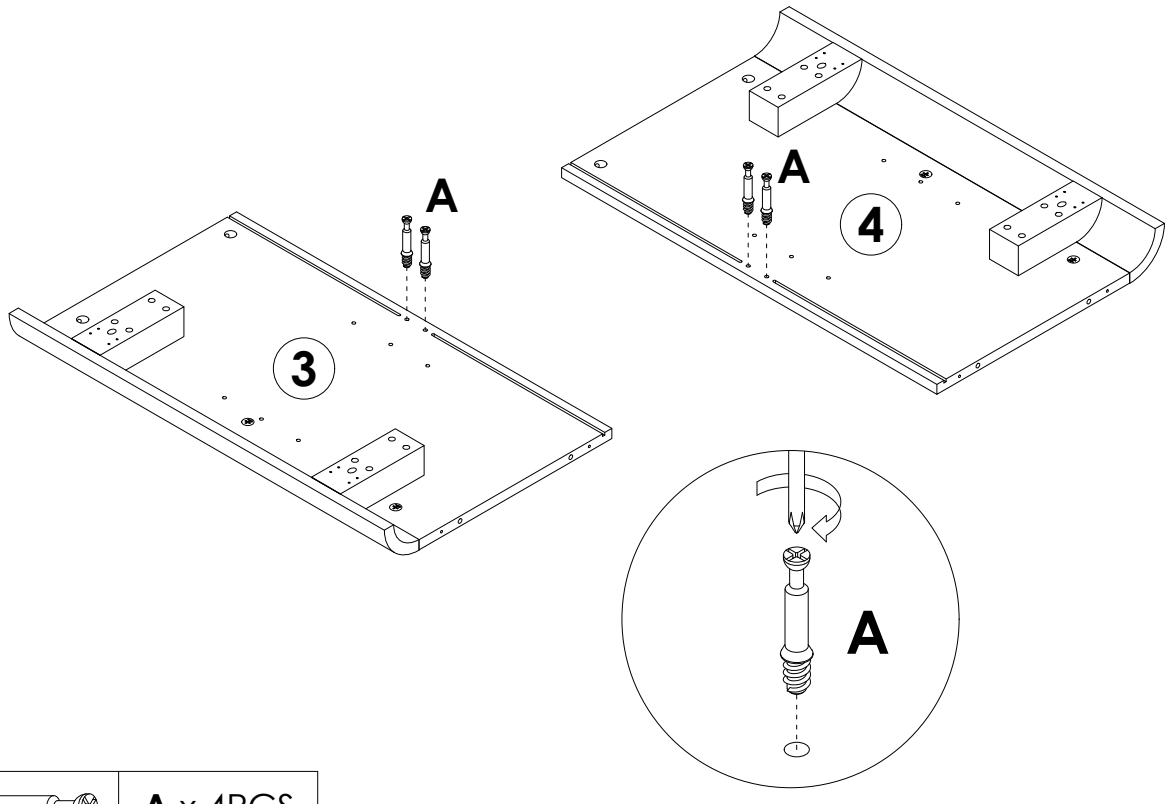

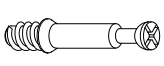

A x 4PCS

STEP 7

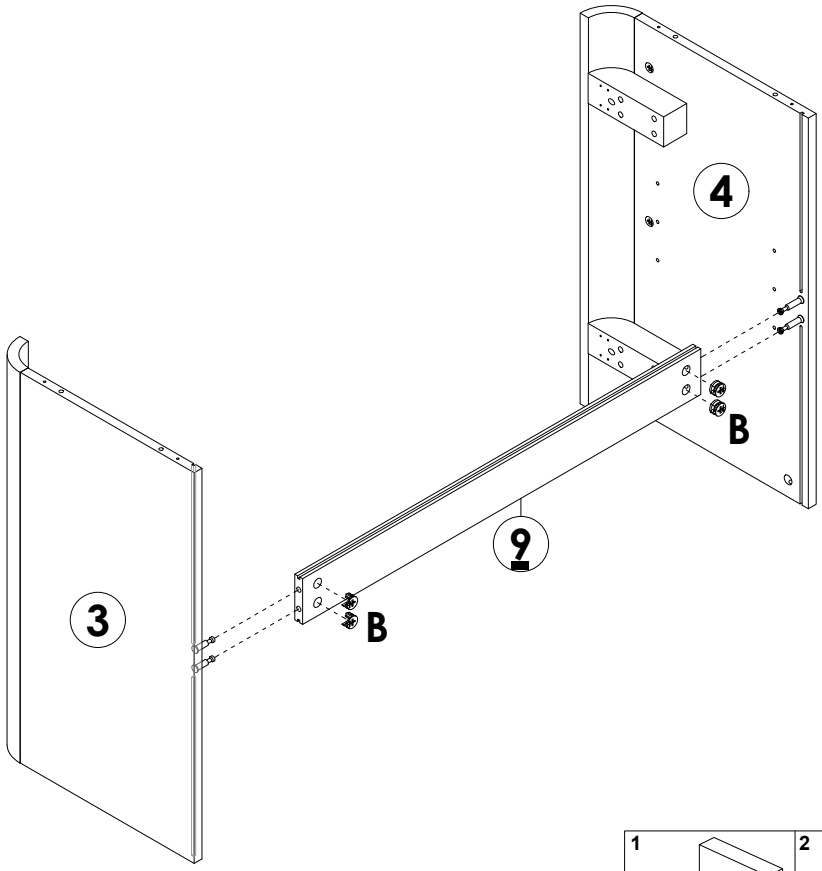

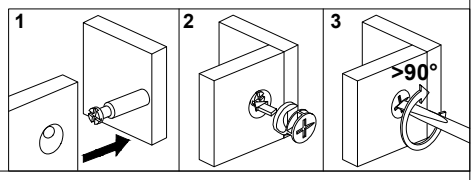



B x 4PCS

STEP 8

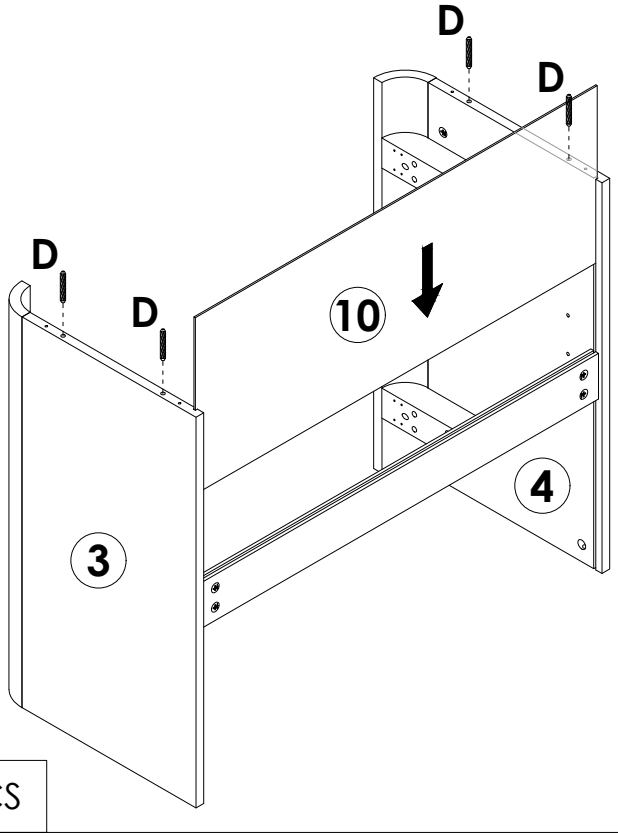



D x 4PCS

STEP 9

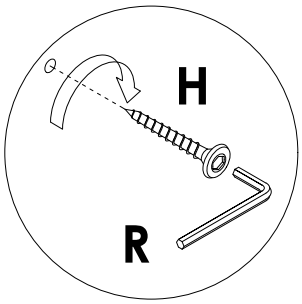

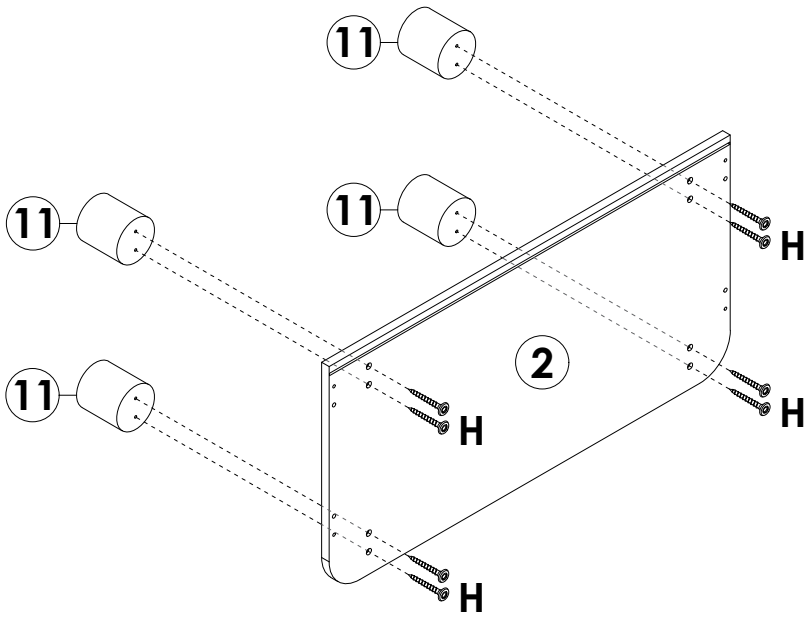

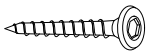	**H** x 8PCS
	**R** x 1PC

STEP 10

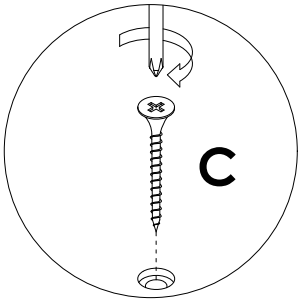

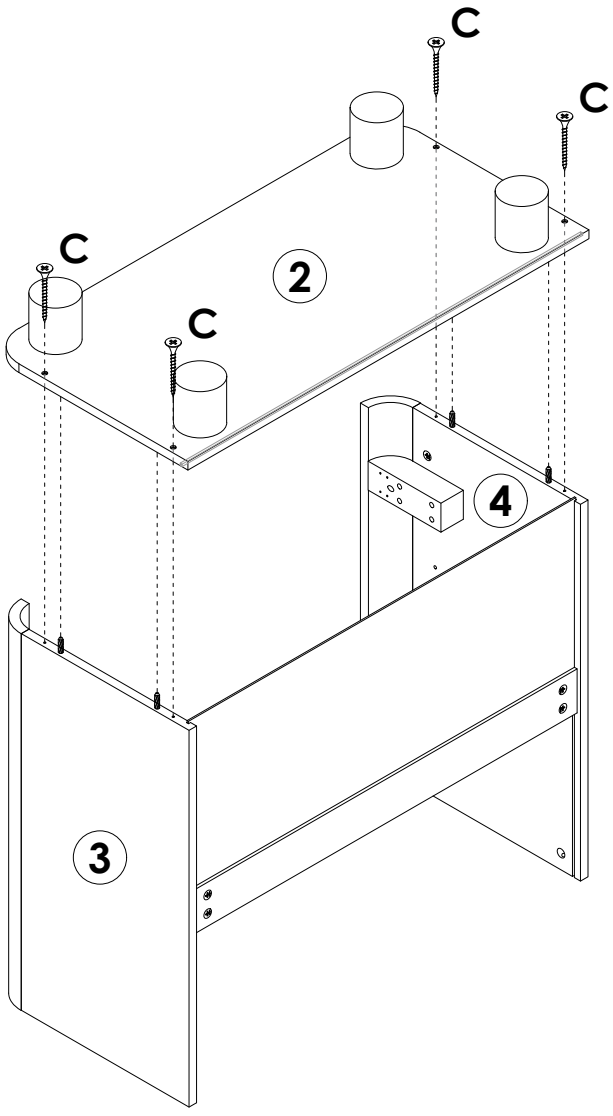

	**C** x 4PCS

STEP 11

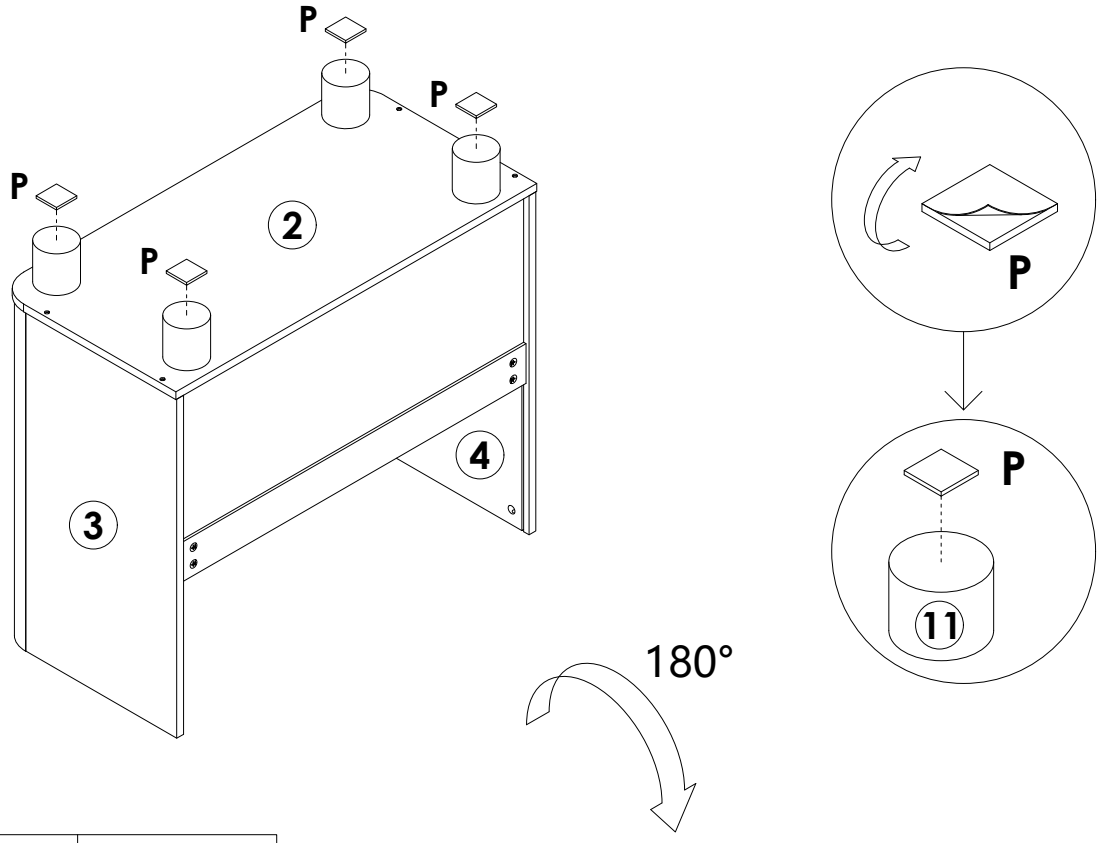

	**P** x 4PCS

STEP 12

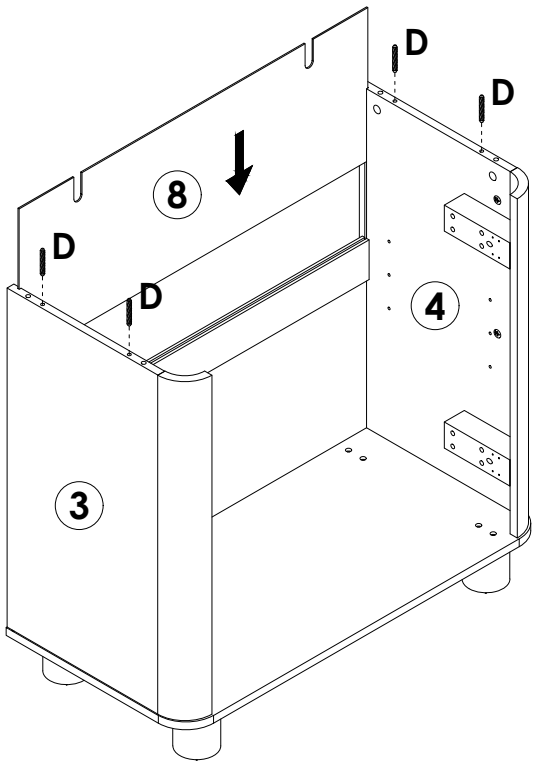

	**D** x 4PCS

STEP 13

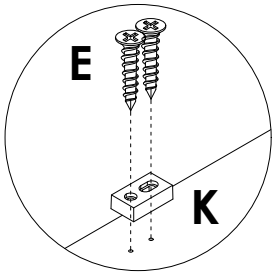

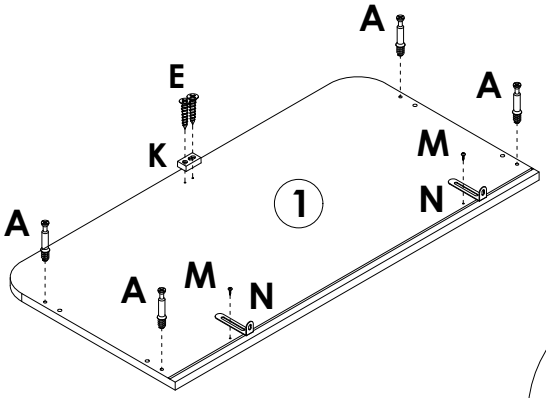

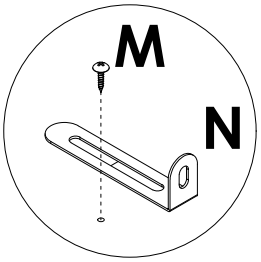

180°

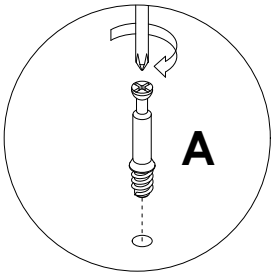

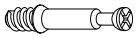	**A** x 4PCS
	**E** x 2PCS
	**K** x 1PC
	**M** x 2PCS
	**N** x 2PCS

STEP 14

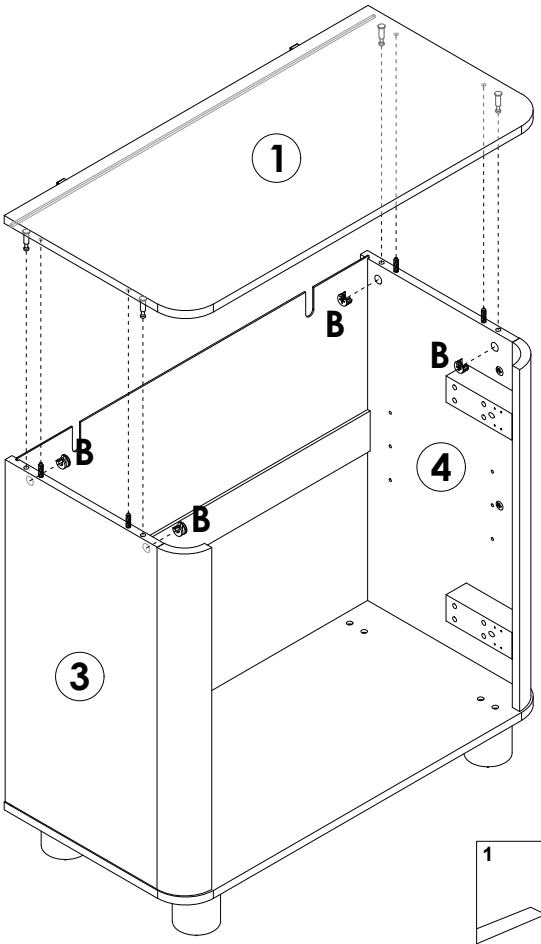

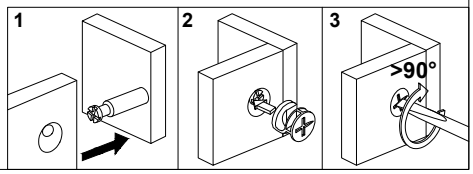

	**B** x 4PCS

STEP 15

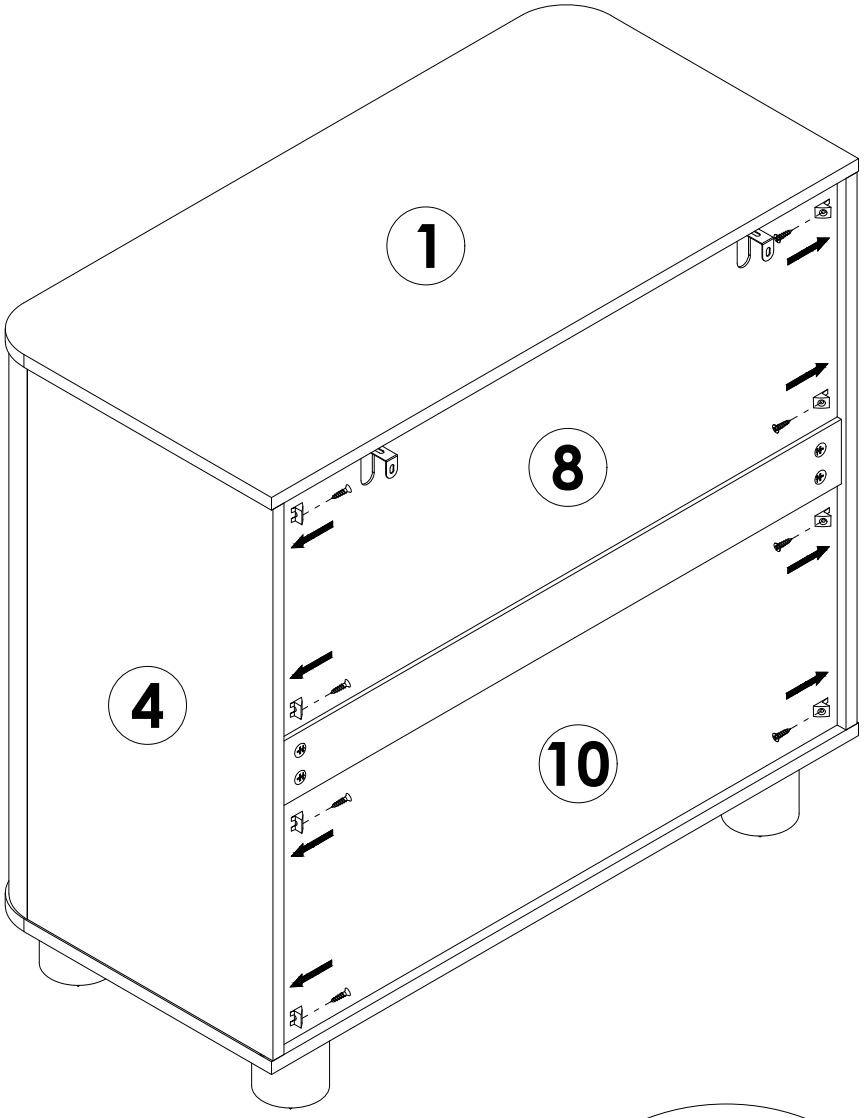

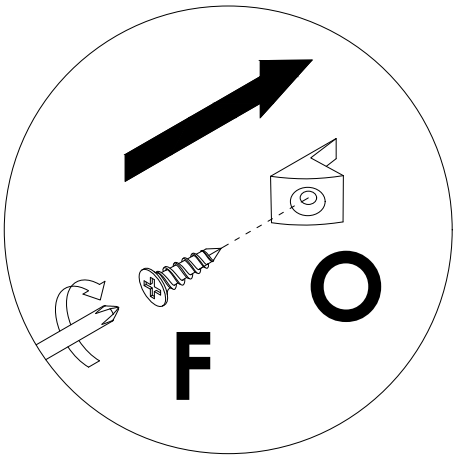

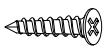	**F** x 8PCS
	**O** x 8PCS

STEP 16

WALL





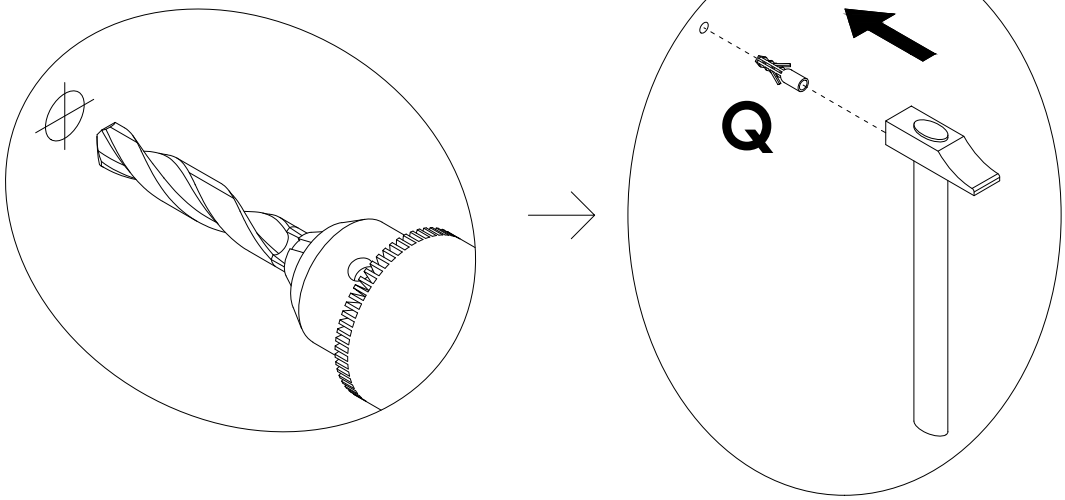

	**Q** x 2PCS

STEP 17

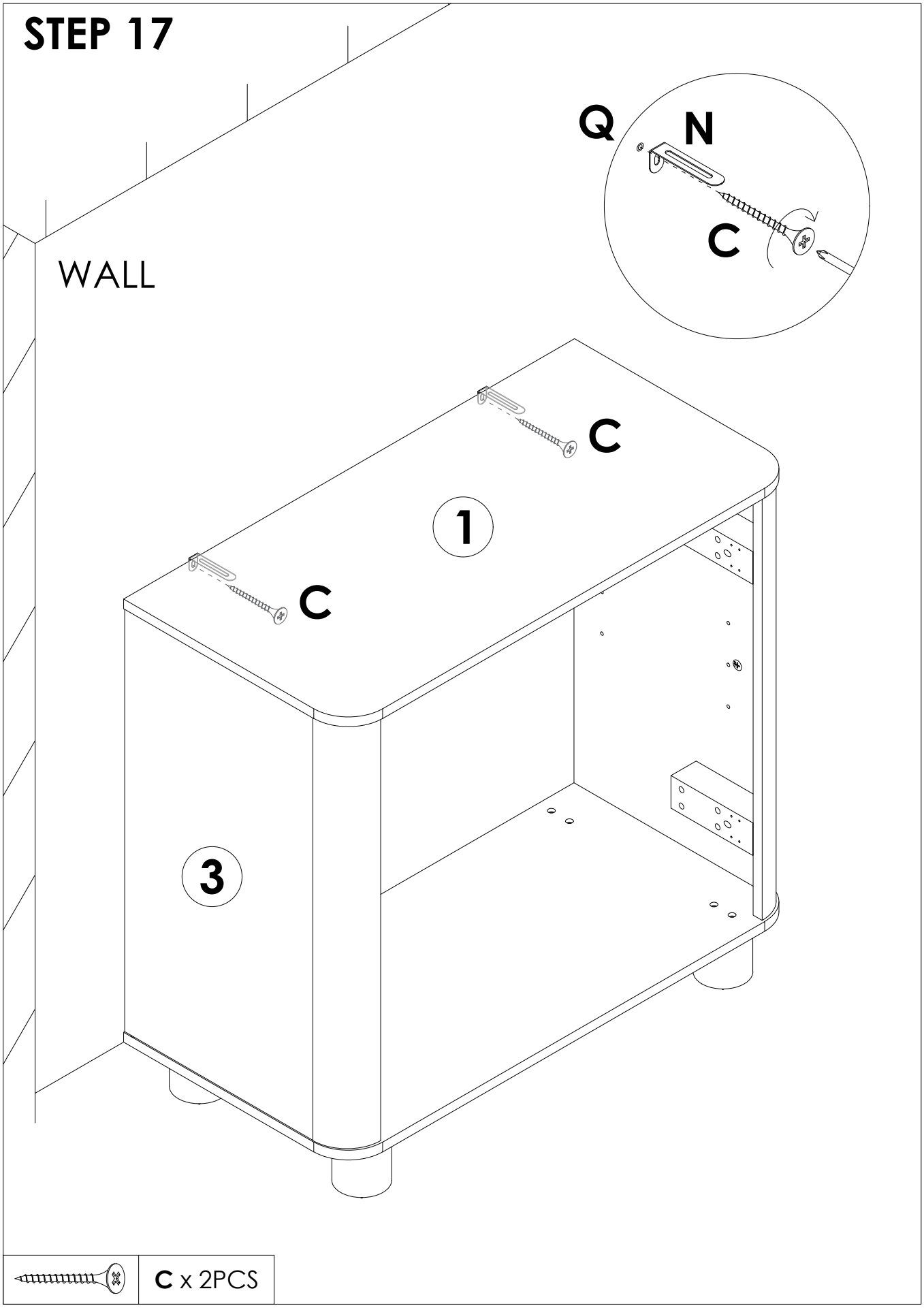

	C x 2PCS

STEP 18

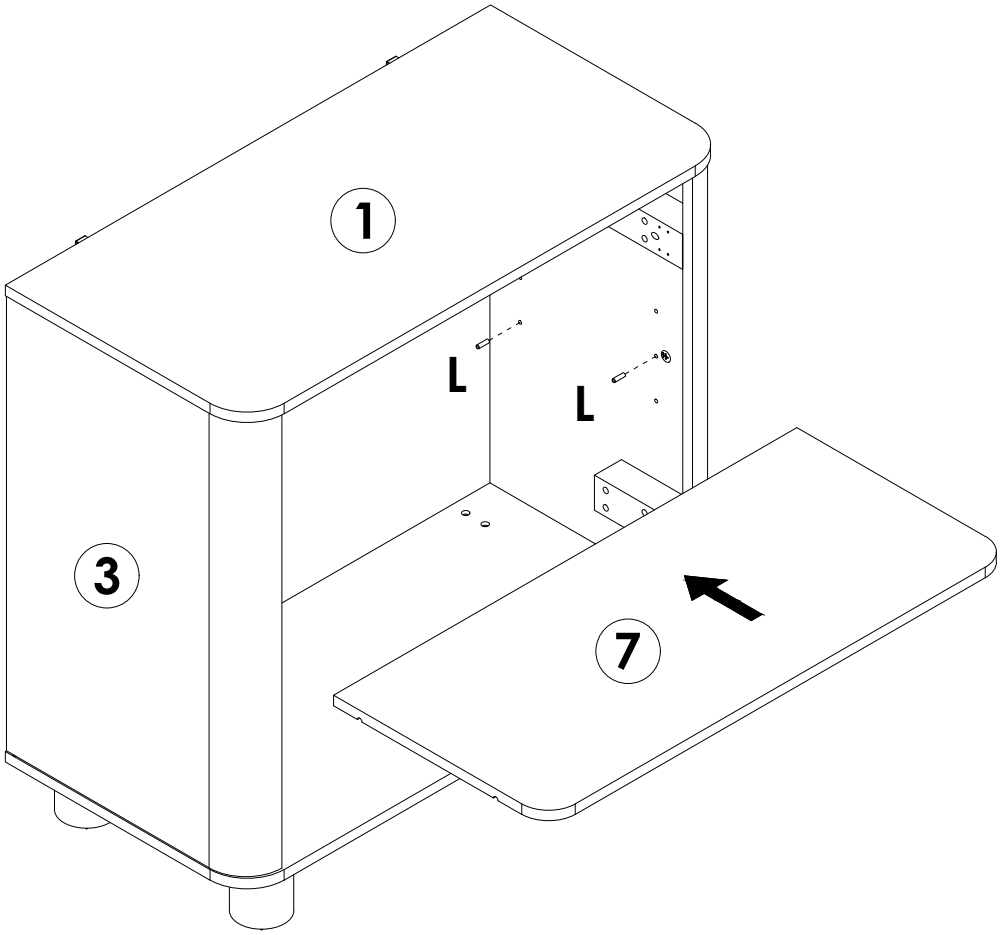

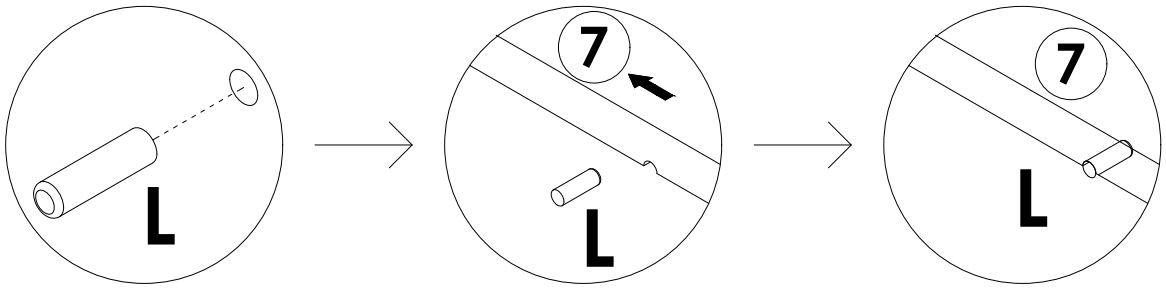

	**L** x 4PCS

STEP 19

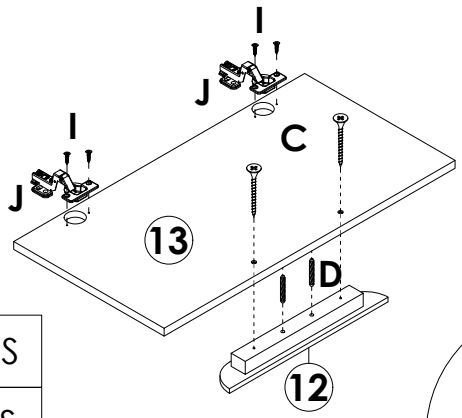

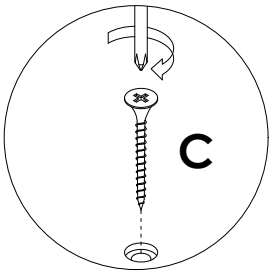

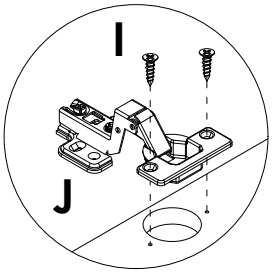

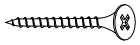	**C** x 4PCS
	**D** x 4PCS
	**I** x 8PCS
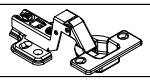	**J** x 4PCS

x2

STEP 20

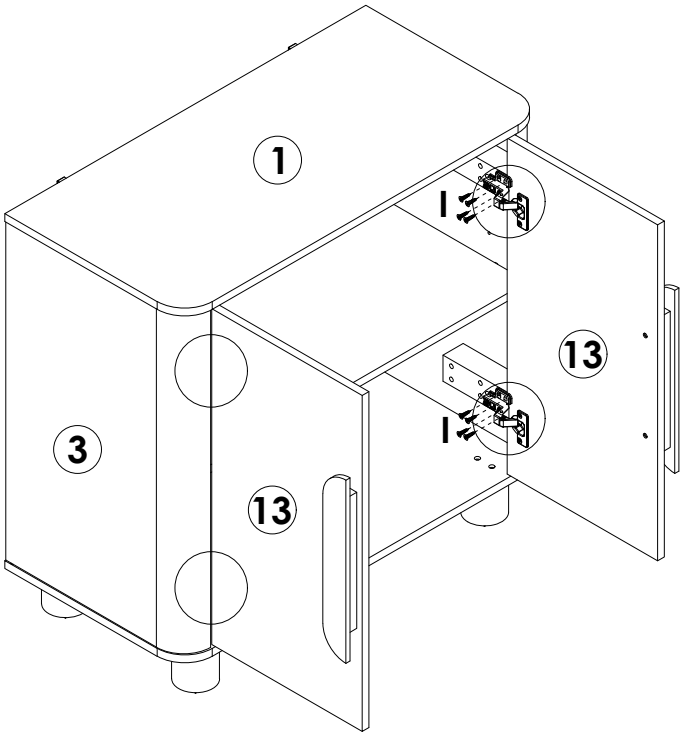

step1 step2 step3 step4

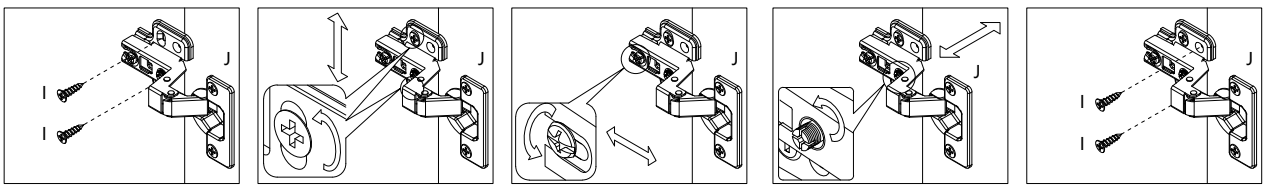

	**I** x 16PCS