IMPORTANT! KEEP FOR FUTURE REFERENCE

Flair furnishings

METAYAL BUNK BED

SIZE: SMALL DOUBLE / DOUBLE

AssemblyIn structions



FOR PARTS & TECHNICAL SUPPORT VISIT:
TELEPHONE: 019 249 50108
EMAIL ADDRESS:
support@bedkingdom.co.uk

Manufacturer:	**FLAIR FURNITURE LTD**	EU REP	**Contact Information:**	**FLAIR FURNITURE IRELAND LTD**
Address:	**Oldfield Ln, Heckmondwike WF16 0JD**		**Address:**	**20 Harcourt Street, Dublin, DO2H364**
Contact Information:	support@bedkingdom.co.uk 01924950108		**Contact Information:**	help@bedkingdom.ie

⚠ WARNING: Contains small parts – choking hazard.

⚠ WARNING: Plastic packaging may cause suffocation. Keep away from babies and young children.

⚠ WARNING: Keep away from open flames and other heat sources.

⚠ WARNING: Ensure adequate airflow and ventilation at alltimes to prevent damp and mould

⚠ WARNING: Ensure all attachments are secure before use. Do not use if parts are loose or damaged.

Tools required (Not Provided)	2 Person assembly recommend	120min (Approx) Set Up
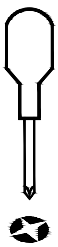	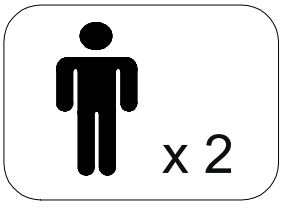	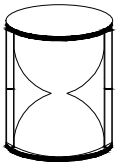

ASSEMBLY INSTRUCTIONS

BS EN 747-1:2024 SAFETY WARNING AND GENERAL NOTES:

IMPORTANT – READ CAREFULLY – RETAIN THESE INSTRUCTION FOR FUTURE REFERENCE.

PLEASE READ this sheet prior to assembly to familiarize yourself with the various stage of construction. Do Not destroy any of the packing until you are certain that you have all the necessary parts for assembly.

CAUTION: There are small components used in the construction of this unit. These loose items should be kept away from young children whilst assembling your unit to avoid the danger of choking hazards.

INFORMATION:

- Importer – Flair Furniture LTD, Oldfield Lane, Heckmondwike, West Yorkshire, England, WF16 0JD
- Due to the size of this product, we recommend that is assembled in the room intended for use.
- When you are ready to start, make sure that you have the right tools, plenty of space and clean, dry area for assembly.
- Unwrap all packaging materials and place each component on top of the carton box or on a clean floor to prevent from scratching.
- Check the pack and make sure you have all the parts listed.
- Tools are not included unless specified in the parts list.
- Ensure that this product is fully assembled as illustrated before use.
- Please keep the assembly instruction for future reference.
- If for any reason you need to return this item, you must return in original packaging. Please be note that assembled items cannot be returned.

WARNING:

- Always follow the manufacturer's instruction.
- This product should only be used on firm, level ground.
- Keep small parts out of reach of children.
- Do Not use power tools to construct this product.
- Do Not over tighten the screw or bolts.
- Do Not tighten screw until the product is fully assembled.
- Do Not use the bunk bed / high bed if any structural part are missing, damaged or worn.
- Do Not exposed this product to dripping or splashing, rain or areas with heavy moisture.
- Do Not place this product in direct sunlight, open flames such as candles or heat, such as radiators. Keep away from temperature over 35°c.
- High bed and the upper bed of the bunk beds are not suitable for children under six years due to the risk of injury from falls.
- Bunk bed and high bed can be present a serious risk of injury from strangulation if not used correctly. Never attach or hang items to any part of the bunk bed that are not designed to be used with the bed, for example, but not limited to ropes, strings, cords, hooks, belts and bags.
- Children can become trapped between the bed and the wall, a roof pitch, the ceiling, adjoining pieces of furniture (e.g. cupboards) and the like. To avoid risk of serious injury the distance between the top safety barrier and the adjoining structure shall not exceed 75mm or shall be more than 230mm.
- Ensure thickness of mattress below the mark that had been made at the entrance of the upper bunk.
- Ensure the ventilation of the room is necessary in order to keep the humidity low and to prevent mould in and around the bed.
- Ensure the support legs/base always remain in contact with the ground, and always use ladder for entering and leaving the high bed and upper bunk.
- Ensure all screws or bolts are tighten and inspect regularly.
- Recommended size of mattress **SMALL DOUBLE** 190(L) x 120(W) cm / **DOUBLE** 190(L) x 135(W) cm
- Upper/Lower Bunk - Thickness of mattress 12-18cm.

CAREINFORMATION

- Never use scourer, abrasives, or chemical cleaners.
- To clean wipe with a damp sponge and warm soapy water. Do Not use solvent-based cleaners or detergents as they can bleach or damage the product.
- Customer support: support@bedkingdom.co.uk

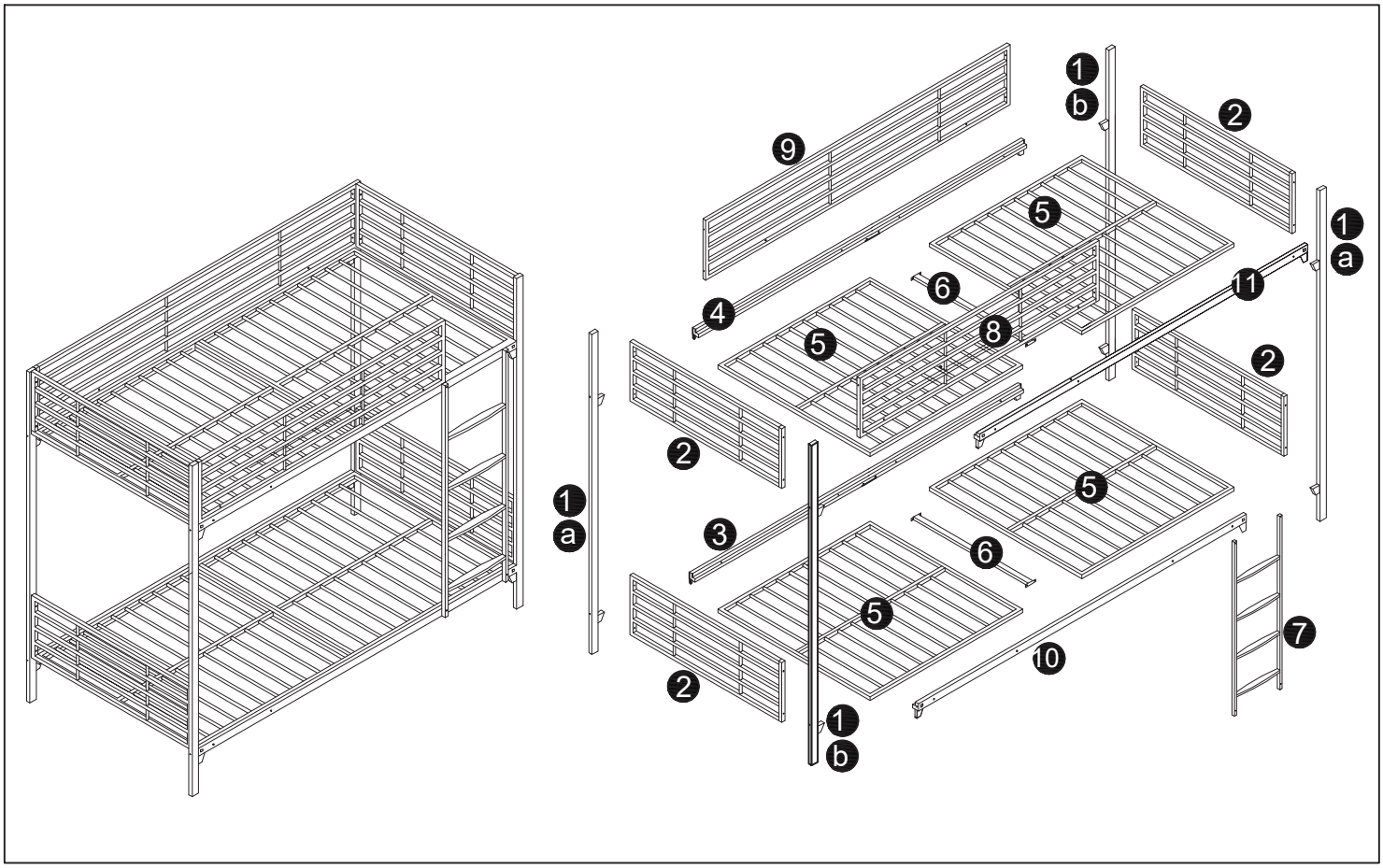

PARTS LIST

METAYAL BUNK BED

CARTON 1 OF 3

No.	Part Name	Pcs
①ⓐ	BED POST	2
①ⓑ	BED POST	2
③	LOWER BUNK SIDE RAILS	1
⑩	LOWER BUNK SIDE RAILS	1
④	UPPER BUNK SIDE RAILS	1
⑪	UPPER BUNK SIDE RAILS	1
⑨	UPPER BUNK SIDE PANEL (BACK)	1
⑥	CENTER SUPPORT RAILS	2
	HARDWARE	1
	ASSEMBLY INSTRUCTIONS	1

CARTON 2 OF 3

No.	Part Name	Pcs
⑧	UPPER BUNK SIDE PANEL (FRONT)	1
②	HEADBOARD / FOOTBOARD	4
⑦	LADDER	1

CARTON 3 OF 3

No.	Part Name	Pcs
⑤	BED BASE	4

A x 8	B x 20
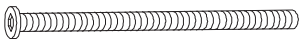 M8 x 90 mm	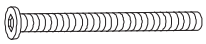 M6 x 35 mm
C x 30	D x 8
 M6 x 15 mm	
E x 8	F x 20
 M8 x 22 mm	 M6 x 18 mm
G x 1	H x 4
 5M	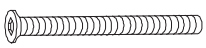 M6 x 35 mm
I x 1	
 4M	

step 1

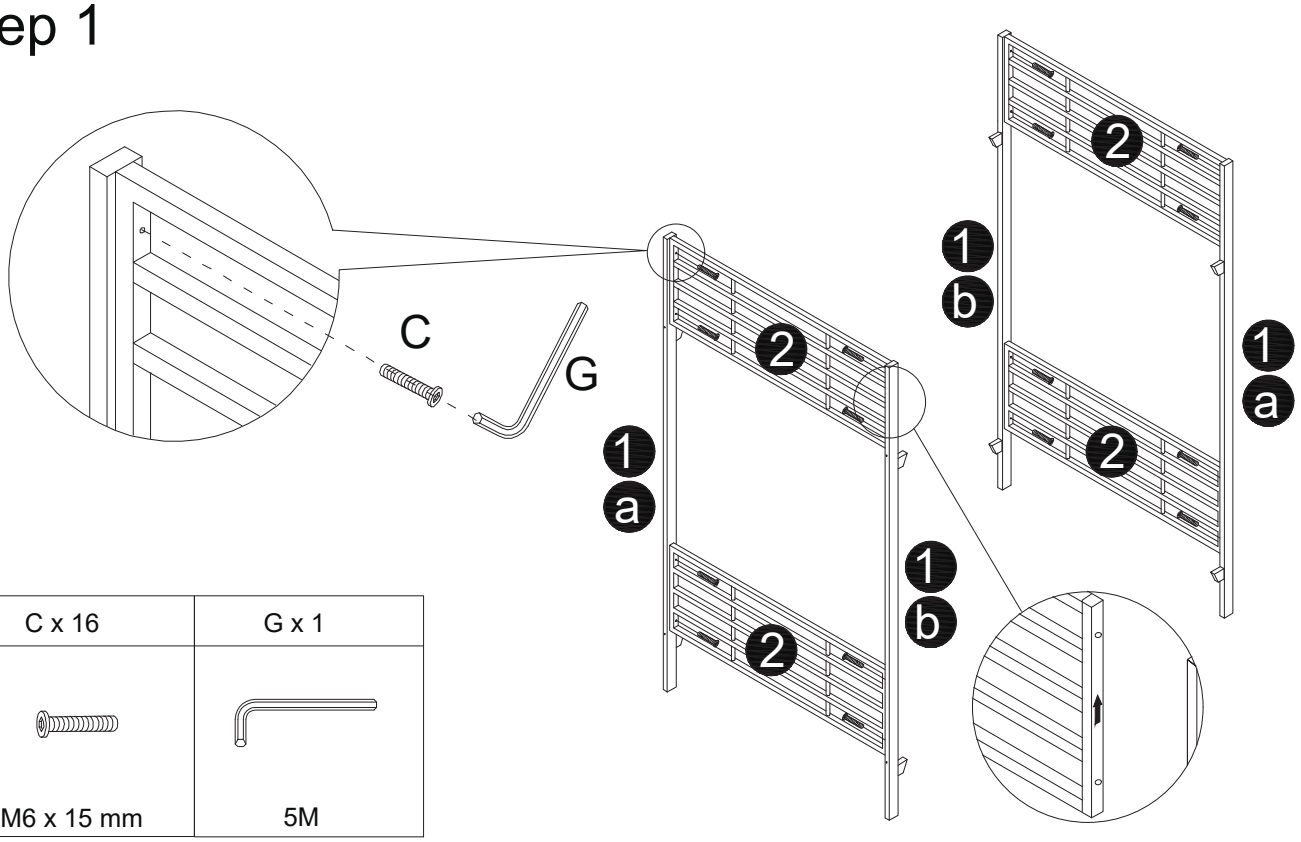

C x 16	G x 1
M6 x 15 mm	5M

step 2

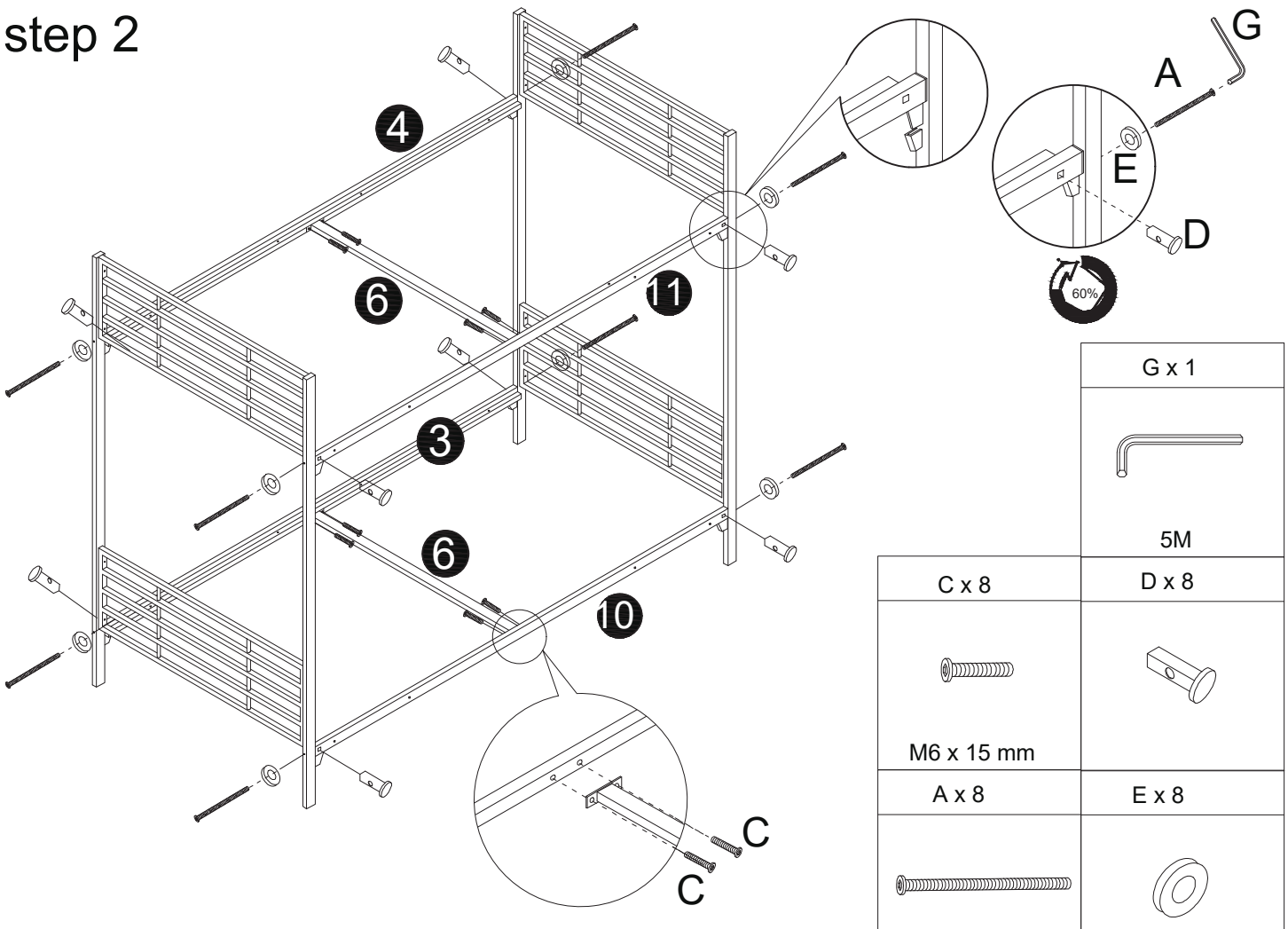

G x 1
5M

C x 8	D x 8
M6 x 15 mm	
A x 8	E x 8
M8 x 90 mm	M8 x 22 mm

step 3

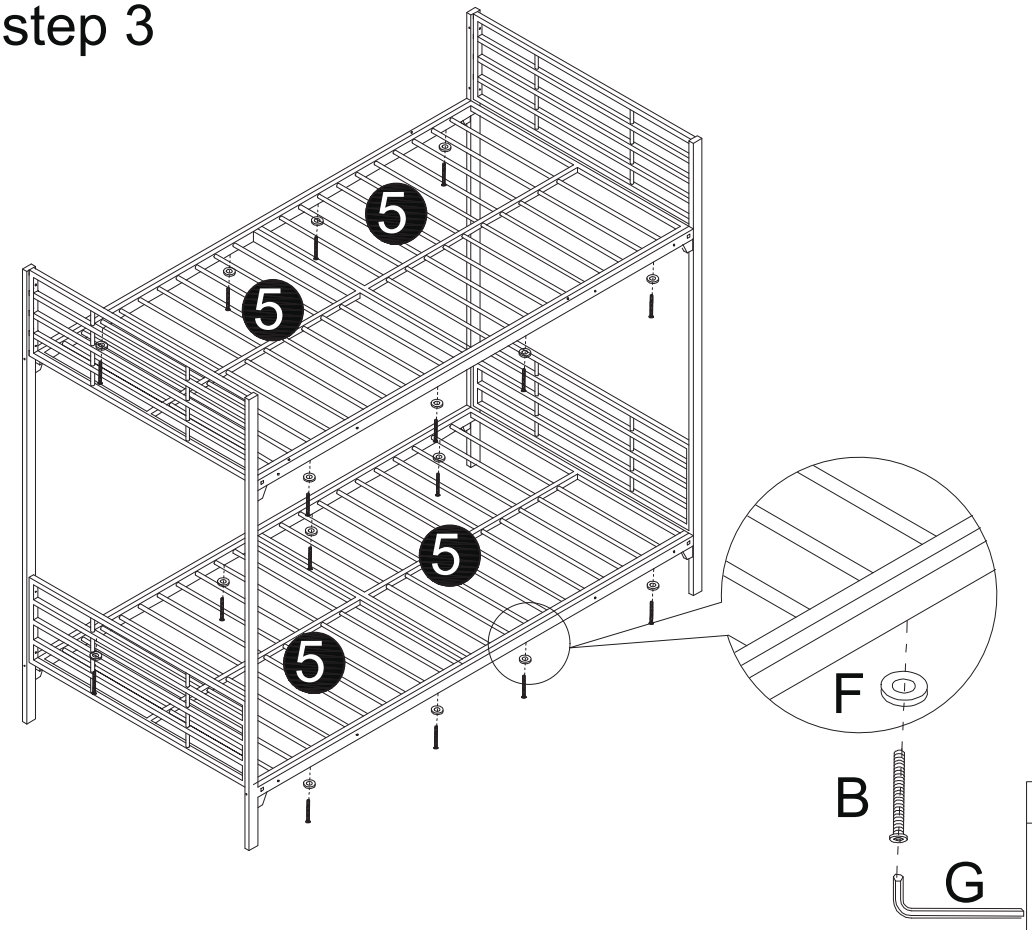

G x 1	
5M	
B x 16	F x 16
M6 x 35 mm	M6 x 18 mm

step 4

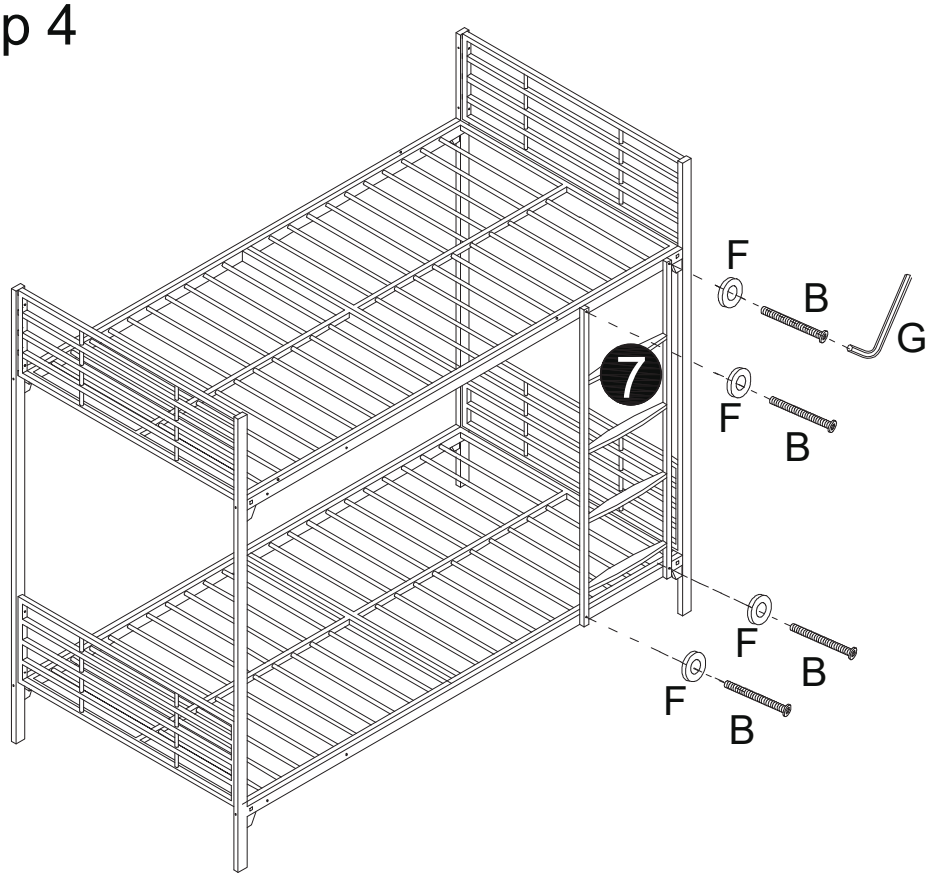

G x 1	
5M	
F x 4	B x 4
M6 x 18 mm	M6 x 35 mm

step 5

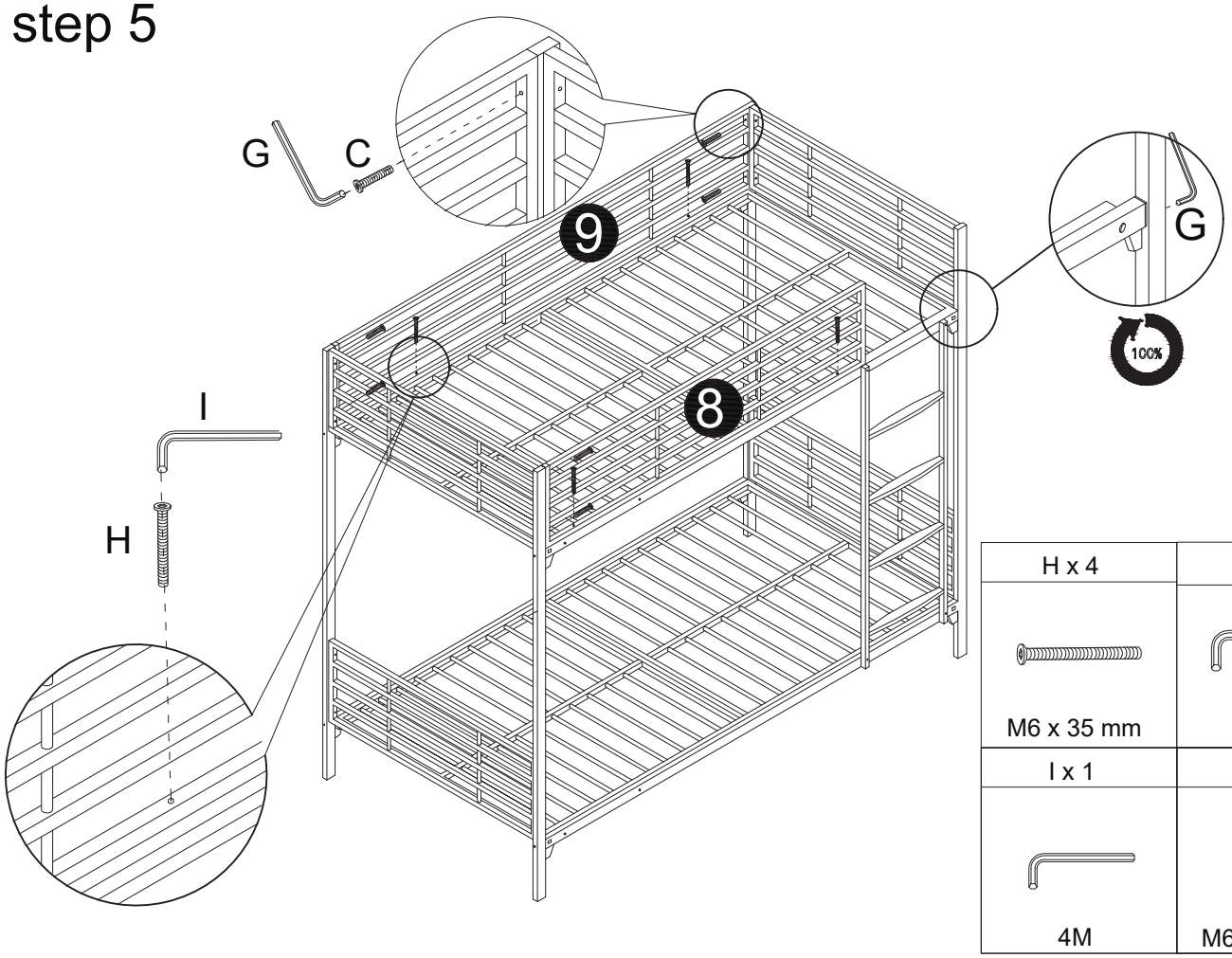

H x 4	G x 1
M6 x 35 mm	5M
I x 1	C x 6
4M	M6 x 15 mm

Finish



The ladder is on the right side



The ladder is on the left side