IMPORTANT! RETAIN FOR FUTURE REFERENCE

Flair furnishings

FRANKIE HOUSE BED

Assembly Instructions

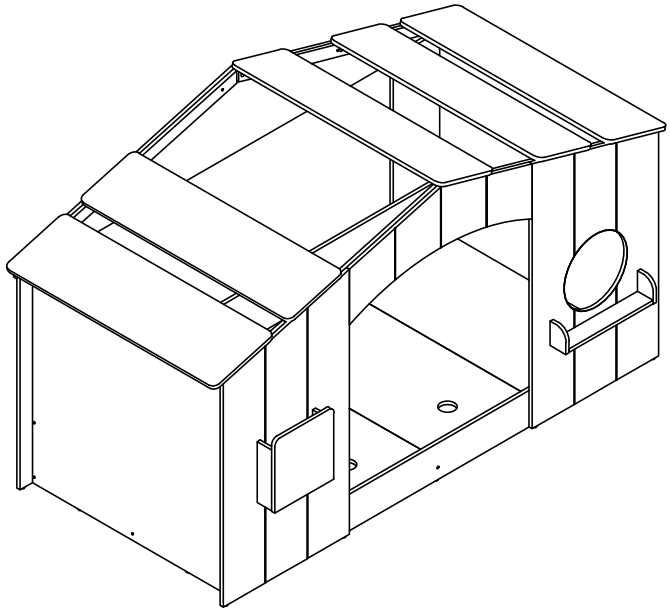

Dimensions: 216 x 100 x 122.8 cm

For parts and Technical Support contact :
Telephone 01924950108
E-Mail support@bedkingdom.co.uk

Tools required (not supplied)

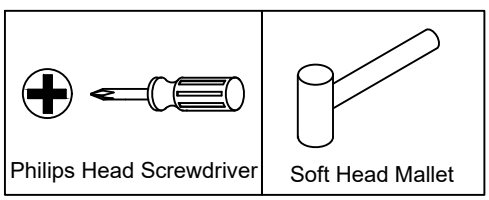

2 Persons assembly recommended

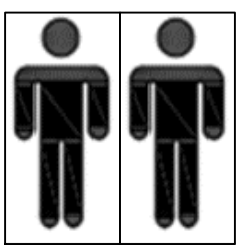

x 2

120 minute (Approx.) for assembly

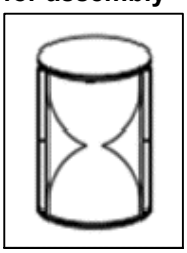

Produced in Malaysia for Flair Furniture Ltd t/a bedkingdom.co.uk

ASSEMBLY INSTRUCTIONS

MANUFACTURED TO BS 8509:2008+A1:2011

IMPORTANT - READ CAREFULLY - RETAIN THESE INSTRUCTIONFOR FUTURE REFERENCE.

PLEASE READ this sheet prior to assembly to familiarize yourself with the various stage of construction. Do Not destroy any of the packing until you are certain that you have all the necessary parts for assembly.

CAUTION: There are small components used in the construction of this unit. These loose items should be kept away from young children whilst assembling your unit to avoid the danger of choking hazards.

INFORMATION:

- Importer - Flair Furniture LTD, Oldfield Lane, Heckmondwike, West Yorkshire, England, WF16 0JD
- Due to the size of this product, we recommend that is assembled in the room intended for use.
- When you are ready to start, make sure that you have the right tools, plenty of space and clean, dry area for assembly.
- Unwrap all packaging materials and place each component on top of the carton box or on a clean floor to prevent from scratching.
- Check the pack and make sure you have all the parts listed.
- Tools are not included unless specified in the parts list.
- Ensure that this product is fully assembled as illustrated before use.
- Please keep the assembly instruction for future reference.
- If for any reason you need to return this item, you must return in original packaging. Please be note that assembled items cannot be returned.

WARNING:

- Always follow the manufacturer's instruction.
- This product should only be used on firm, level ground.
- Keep small parts out of reach of children.
- Do Not use power tools to construct this product.
- Do Not over tighten the screw or bolts.
- Do Not tighten screw until the product is fully assembled.
- Do Not use the bed if any structural part is missing, damaged or worn.
- Do Not exposed this product to dripping or splashing, rain or areas with heavy moisture.
- Do Not place this product in direct sunlight, open flames such as candles or heat, such as radiators. Keep away from temperature over 35°c.
- Not suitable for children under 4 years.
- Children are likely to play, bounce, jump and climb on beds, therefore the child's bed should not be placed too close to other furniture or windows, blind cords, curtain pulls or other strings or cords, and should be placed either tight to any wall or have a gap of 300 mm between the wall and the side of the bed.
- Ensure the ventilation of the room is necessary in order to keep the humidity low and to prevent mould in and around the bed.
- Ensure all screws or bolts are tighten and inspect regularly.
- Recommended size of mattress 190(L) x 90(W) cm
- Recommended thickness of mattress 12-20cm.

BEFORE YOU START:

- ✓ **Check that this is the item you order especially the correct colour.**
- ✓ **DO NOT throw away the packaging until you are sure you are keeping the bed**
- ✓ **Double check you have all the parts before starting using the parts list in the in these instructions and that there is no damage.**
- ✓ **If you decide to return your bed please repack in the original packaging, wrapping all parts including all the hardware and securely tape seal the box(es). DON'T be afraid to use lots of tape.**

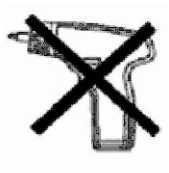

WARNING USING POWER TOOLS TO ASSEMBLE THIS BED IS STRONGLY UNADVISED AS IT MAY BE UNSAFE THE USE OF THESE WILL INVALIDATE ANY CLAIM.

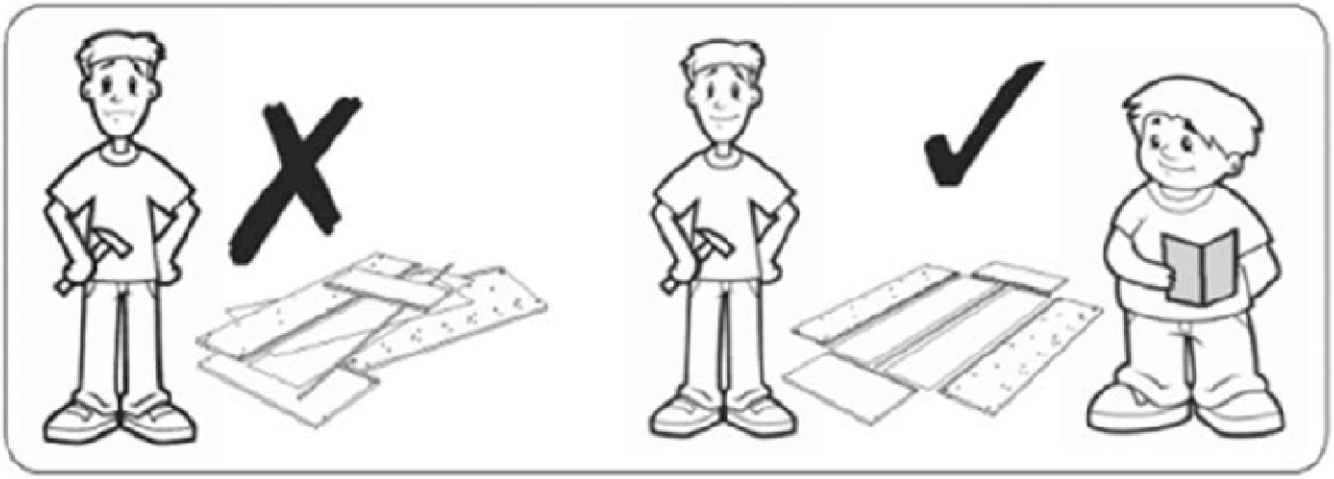

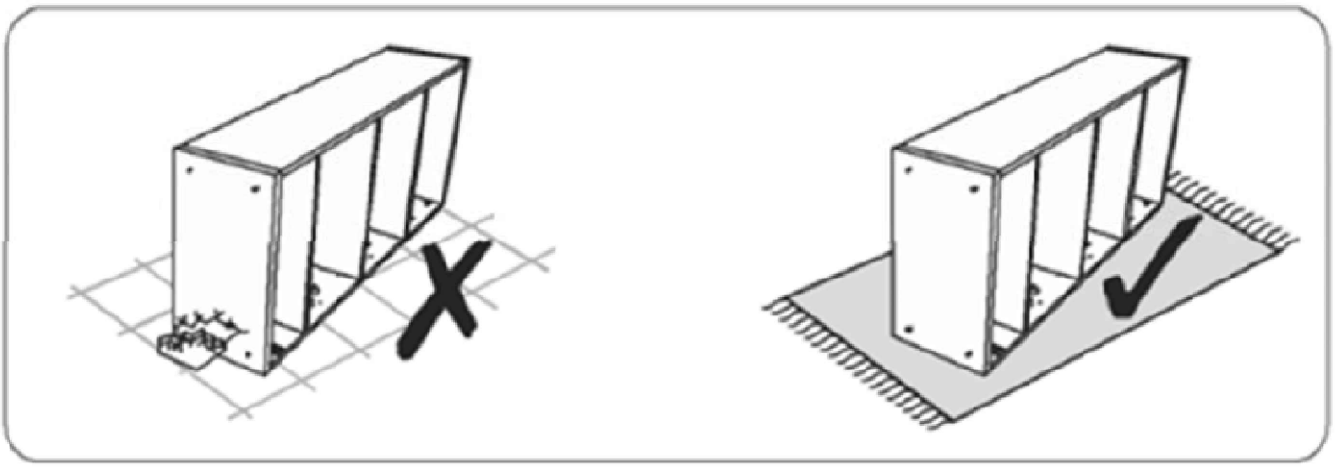

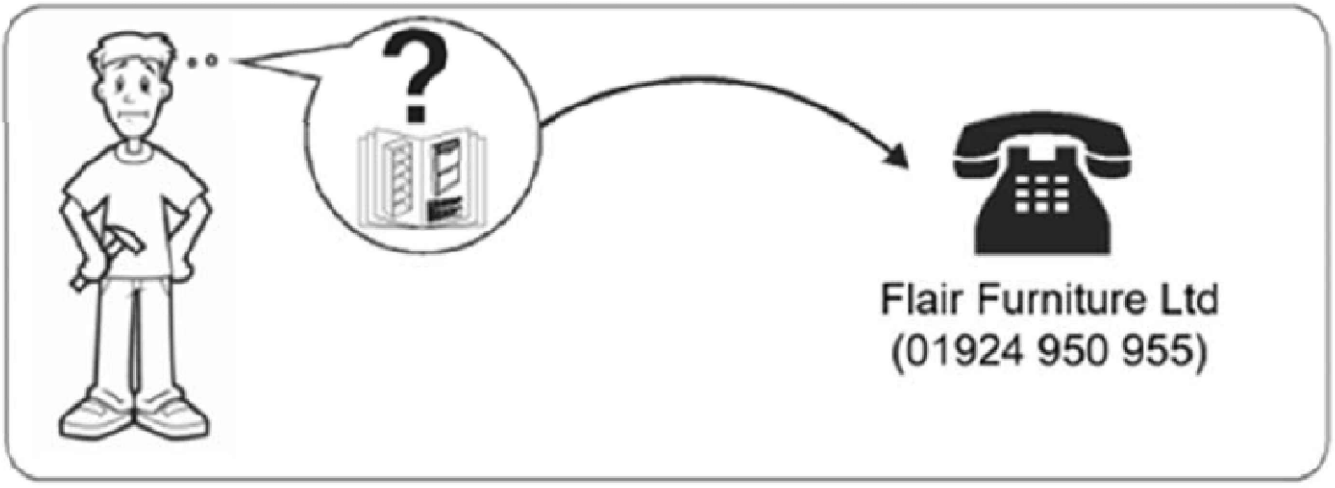

PARTS LIST

Carton 1 of 4:

Part	Description	Qty
3	Roof Support Panel (Rear)	1
4	Roof Support Panel (Rear)	1
5	Roof Support Panel (Front)	1
6	Roof Support Panel (Front)	1
17	Base Panel	2
18	Base Panel	2
19	Bookcase Front Panel	1
20	Bookcase Bottom Panel	1
21	Bookcase Left Panel	1
22	Bookcase Right Panel	1
23	Rack Bottom Panel	1
24	Rack Left Panel	1
25	Rack Right Panel	1
	Hardware	

Carton 2 of 4:

Part	Description	Qty
8	Front Center Frame Panel	1
11	Rear Support Panel	2
12	Left Panel	1
13	Right Panel	1

Carton 3 of 4:

Part	Description	Qty
1	Roof Panel	2
2	Roof Panel	3
9	Front Left Frame Panel	1
10	Front Right Frame Panel	1

Carton 4 of 4:

Part	Description	Qty
7	Roof Support Panel (Rear)	1
14	Side Rail (Rear)	1
15	Side Rail (Front)	1
16	Base Bottom Support Panel	1
26	Base Support Panel	2

HARDWARE LIST: Carton 1 of 4

Part	Description	Qty
A	CAM NUT 15 mm 	36
B	CAM BOLT 	28
C	DOUBLE END BOLT 7 mm 	4
D	WOOD DOWEL M6 x 25 mm 	26
E	WOOD DOWEL M8 x 50 mm 	4
F	M5 x 40MM UNITAR SCREW 	28
G	PVC NAIL 5/8" 	18
H	CSK SCREW M4 x 38 mm 	16
I	JCBC SCREW M6 x 45 mm 	6
J	JCBC SCREW M6 x 30 mm 	2
K	JCBC SCREW M6 x 25 mm 	20
L	JCN NUT M6 	16
M	ALLEN KEY M6 	2

PARTS DIAGRAM

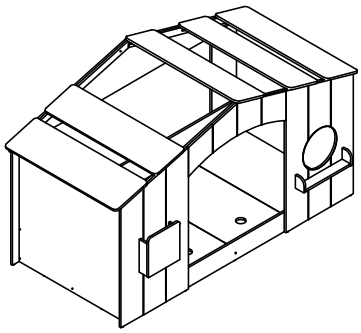

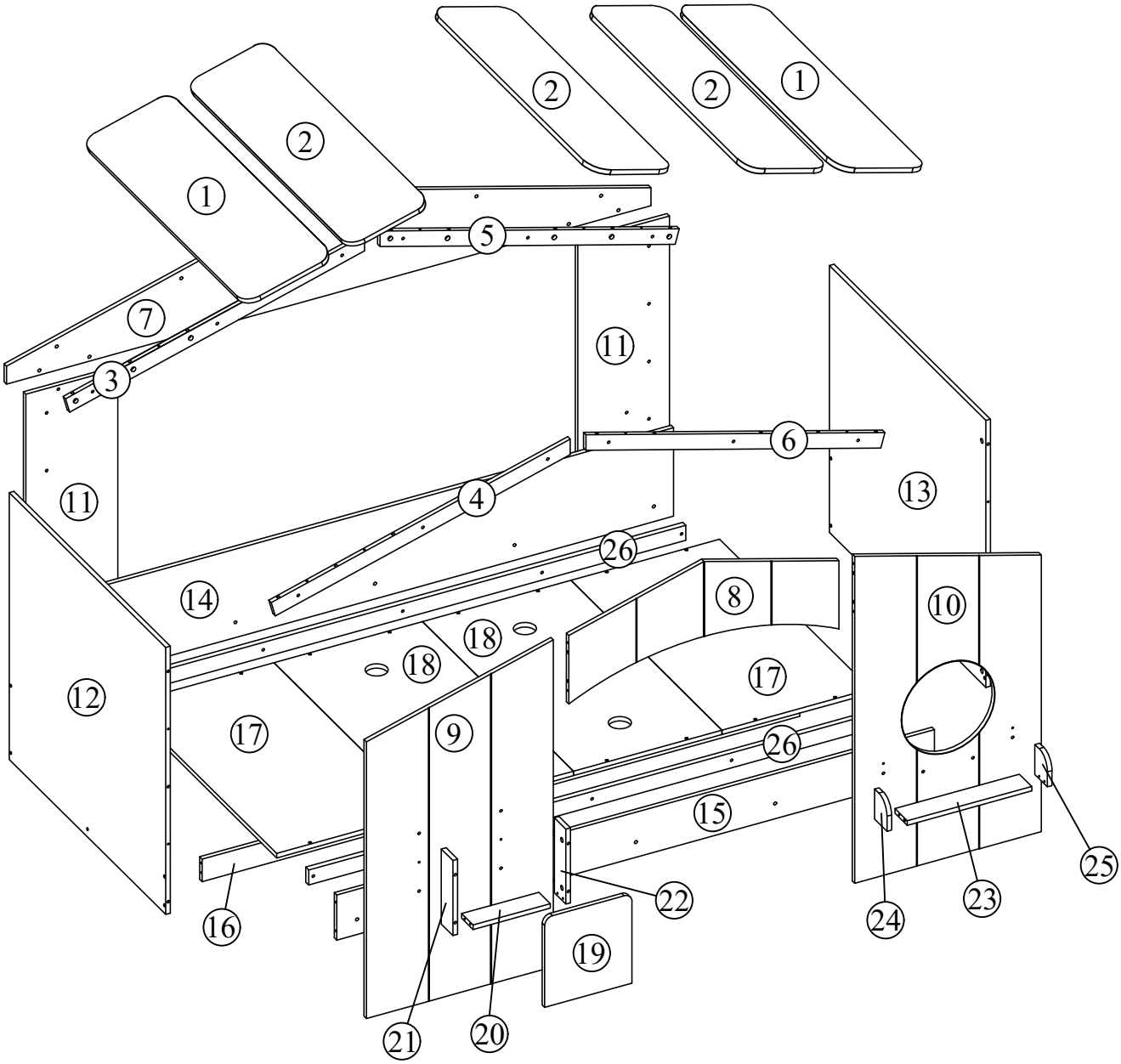

1

A		36
B		28
D		26
E		4
G		18

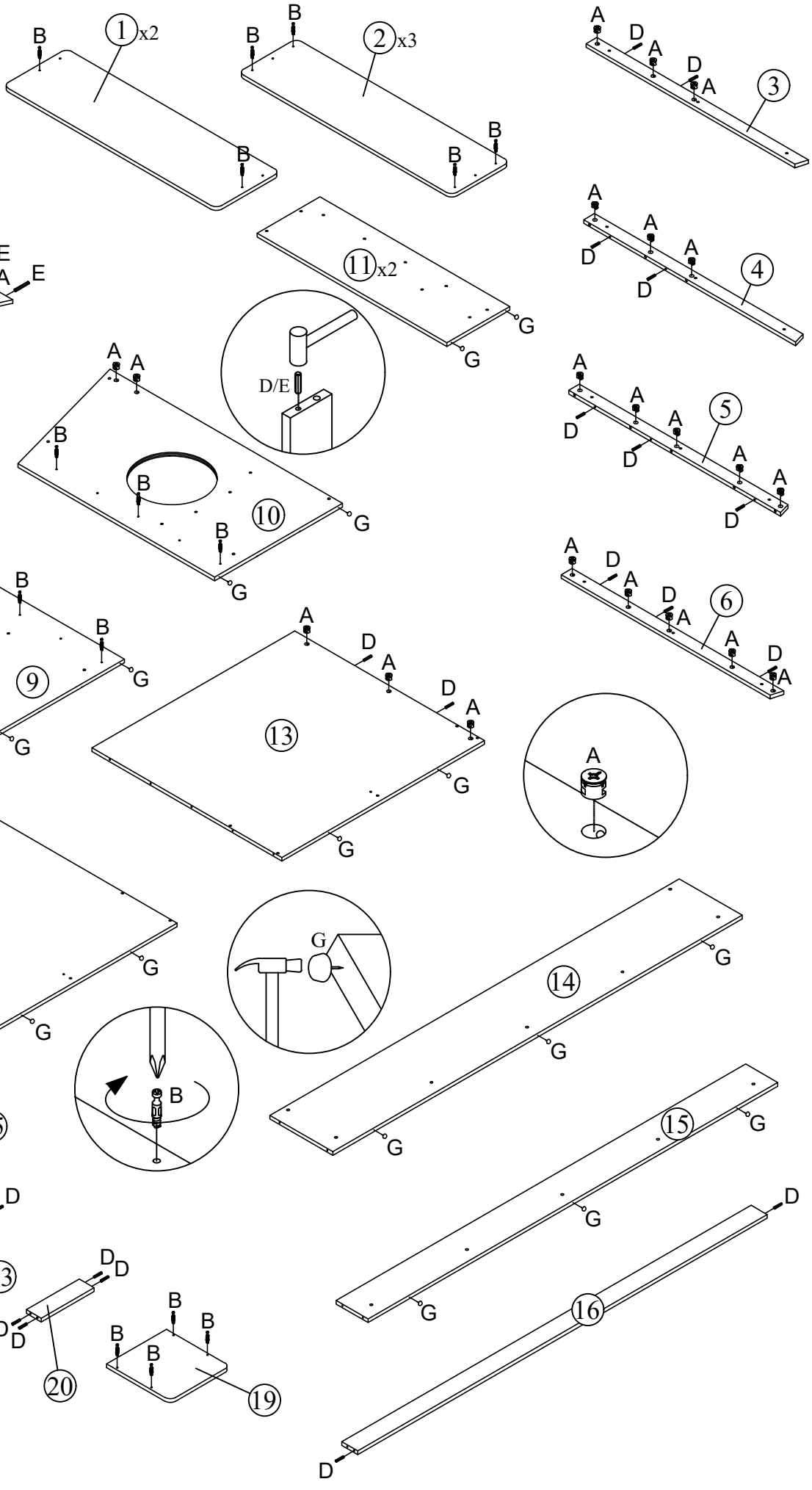

2 F | 10

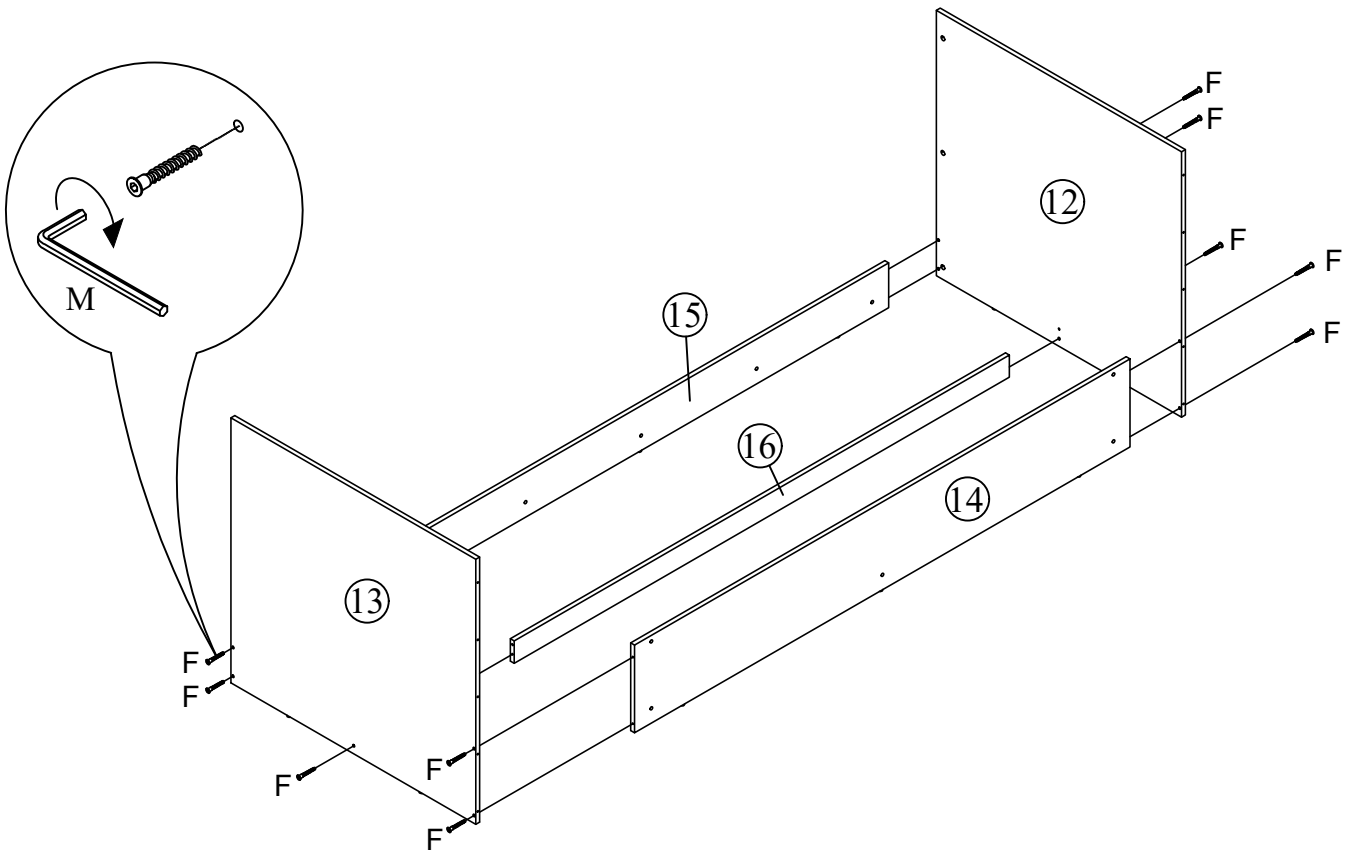

3 F | 10

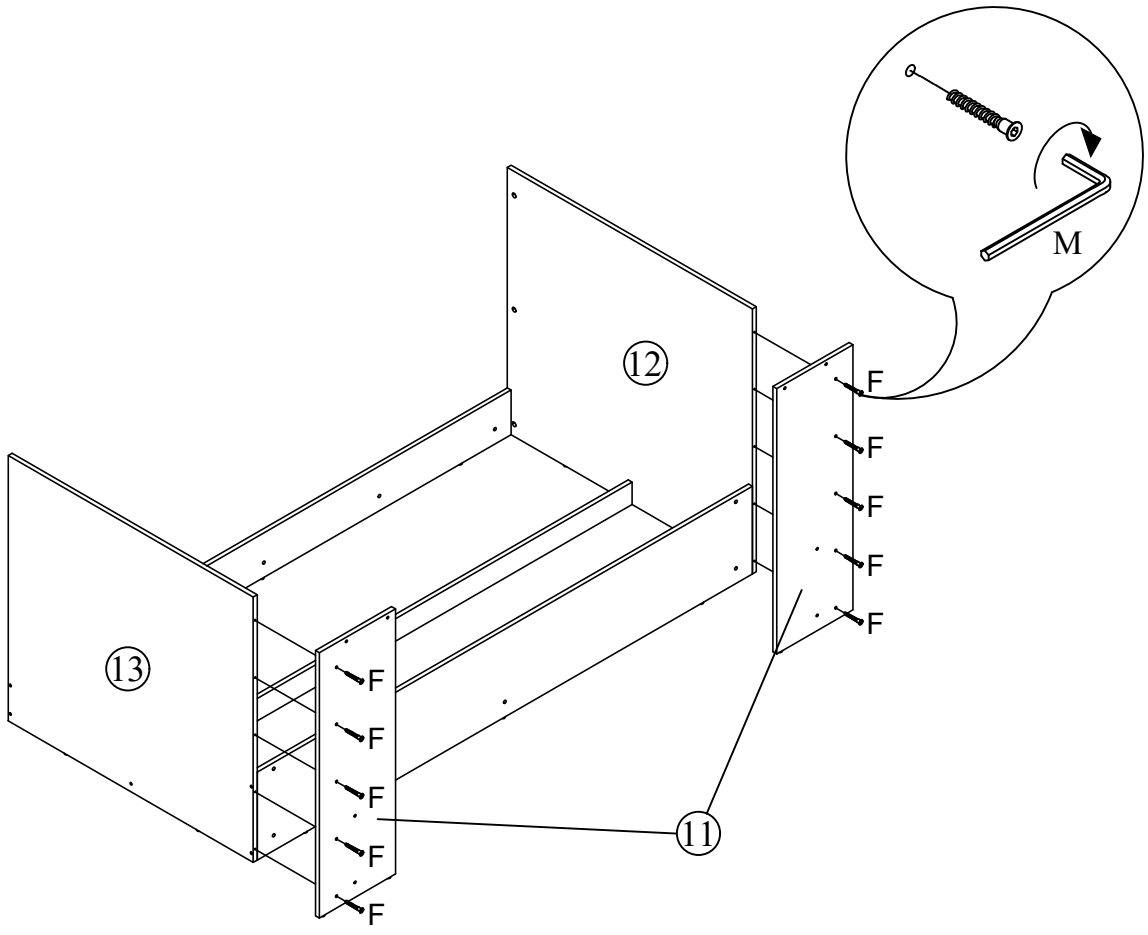

4

C		4

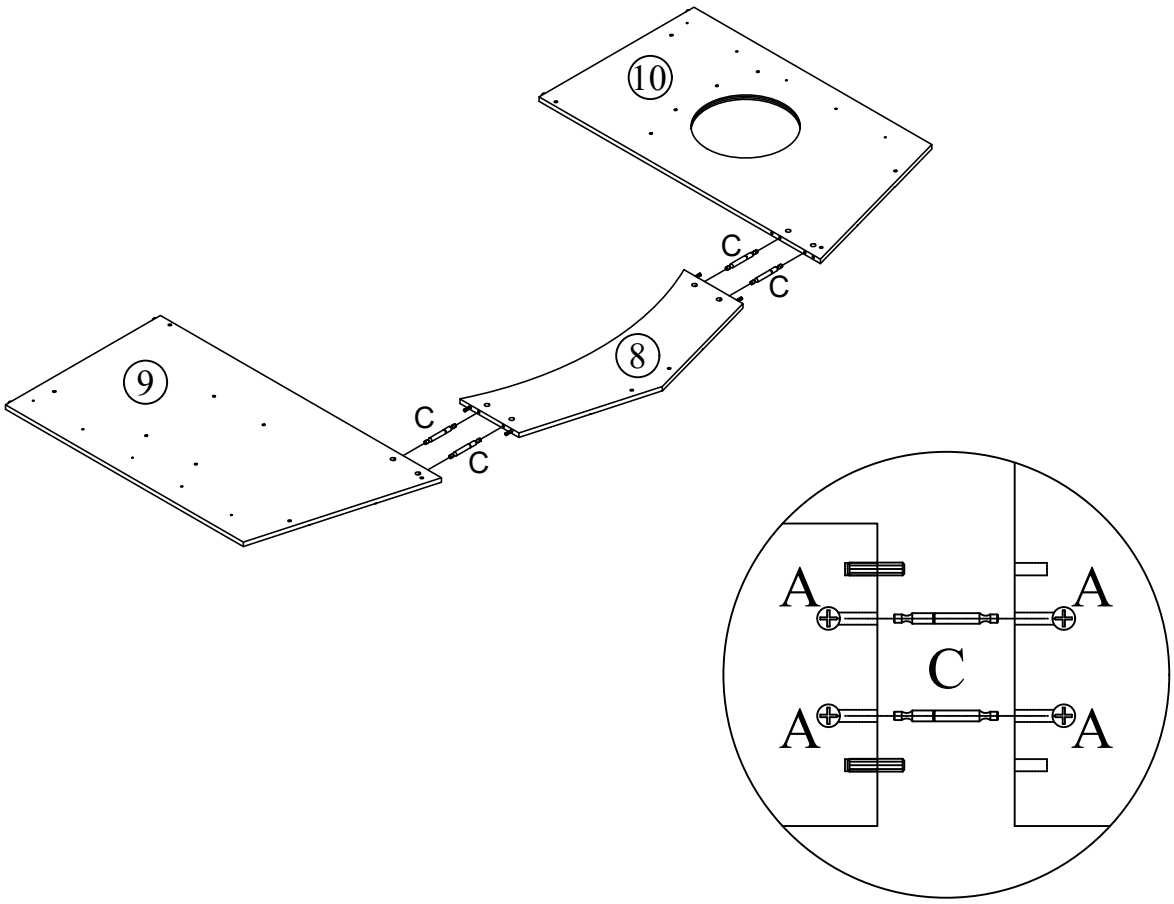

5

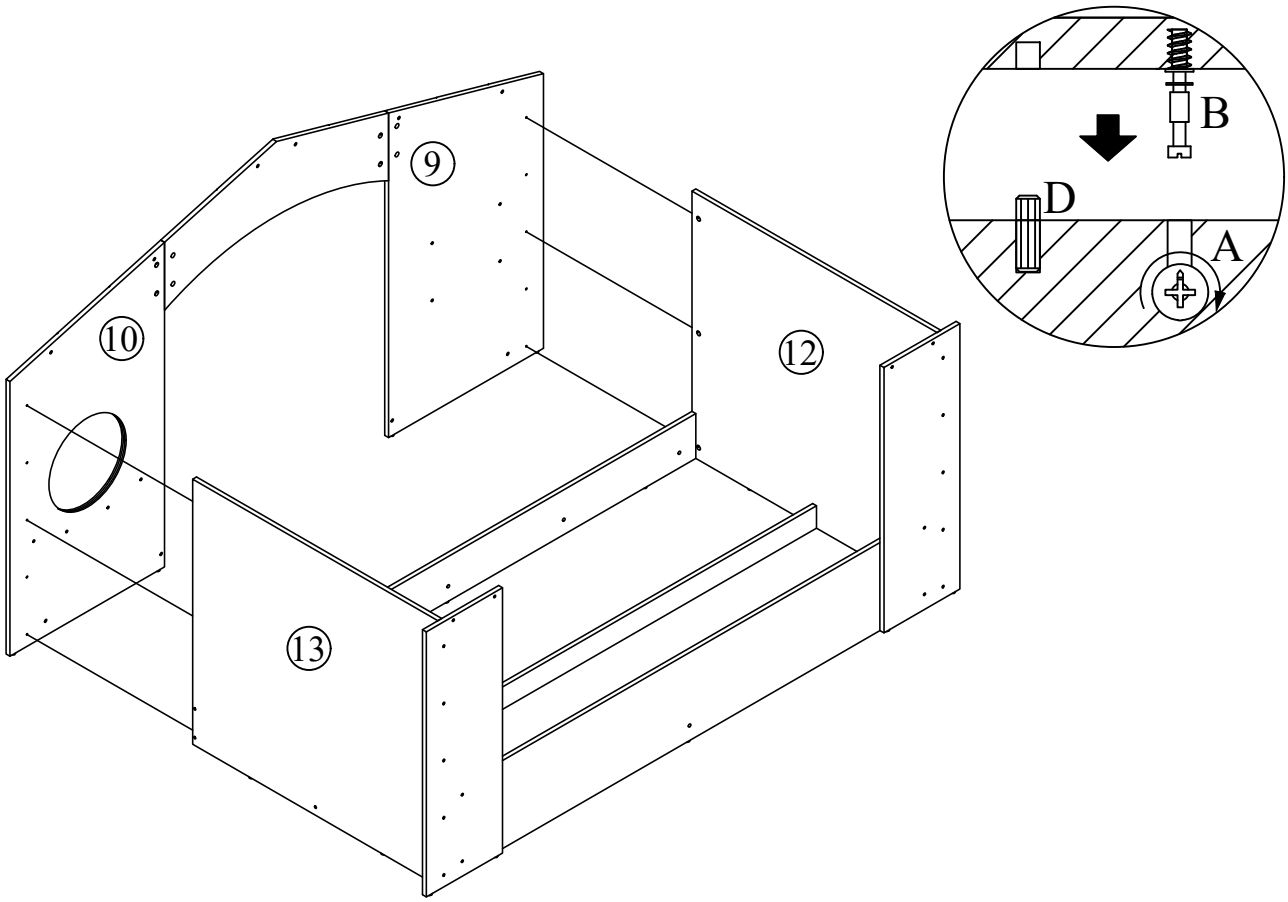

6

I		6
J		2
K		4
L		6

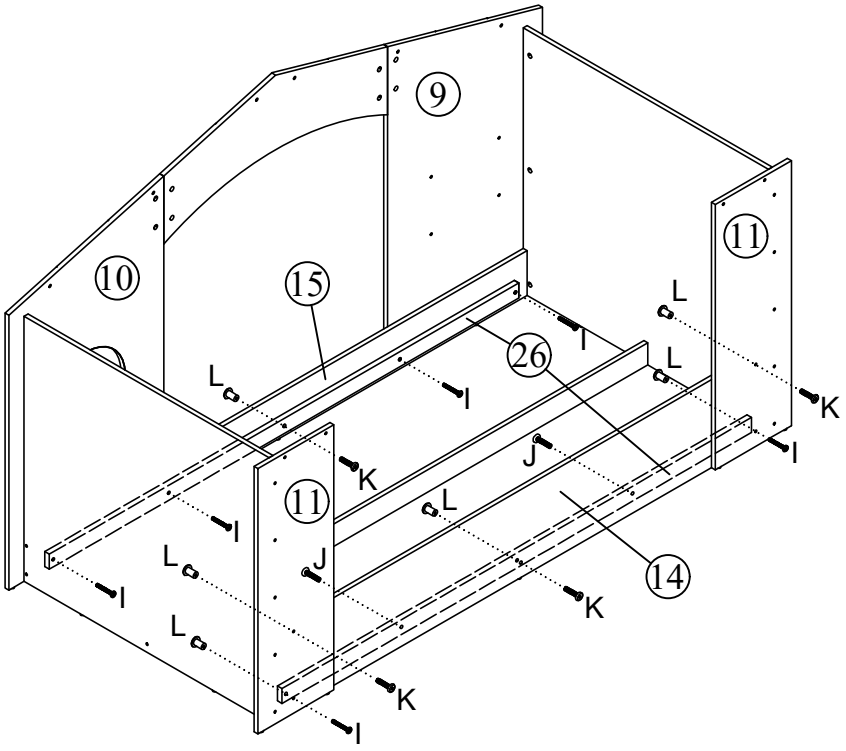

7

K		4
L		4

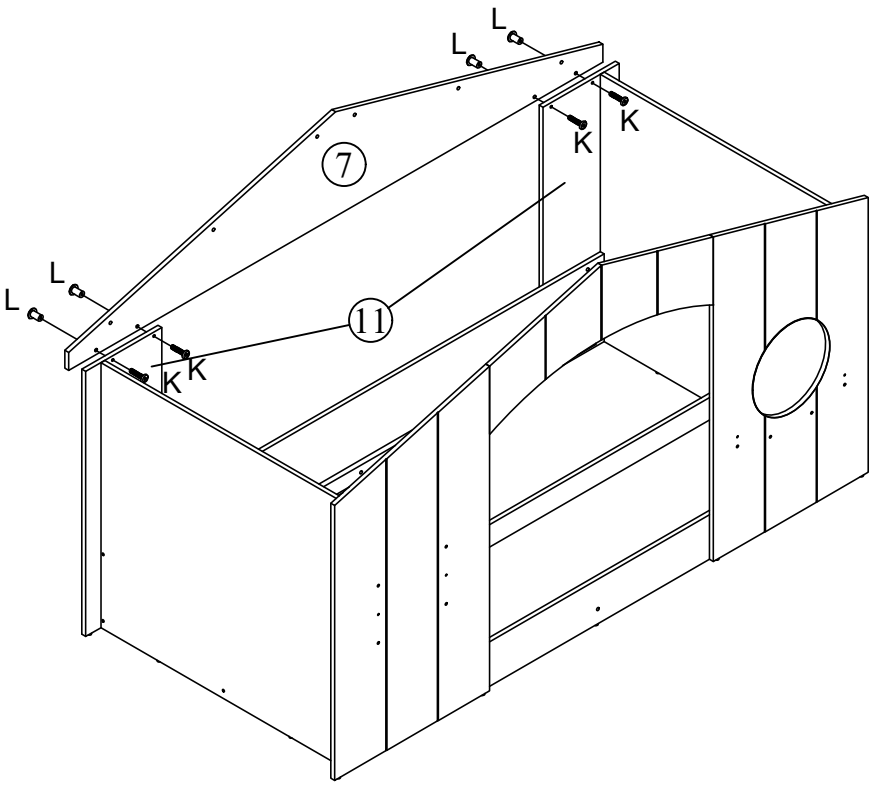

8

K		12
L		6

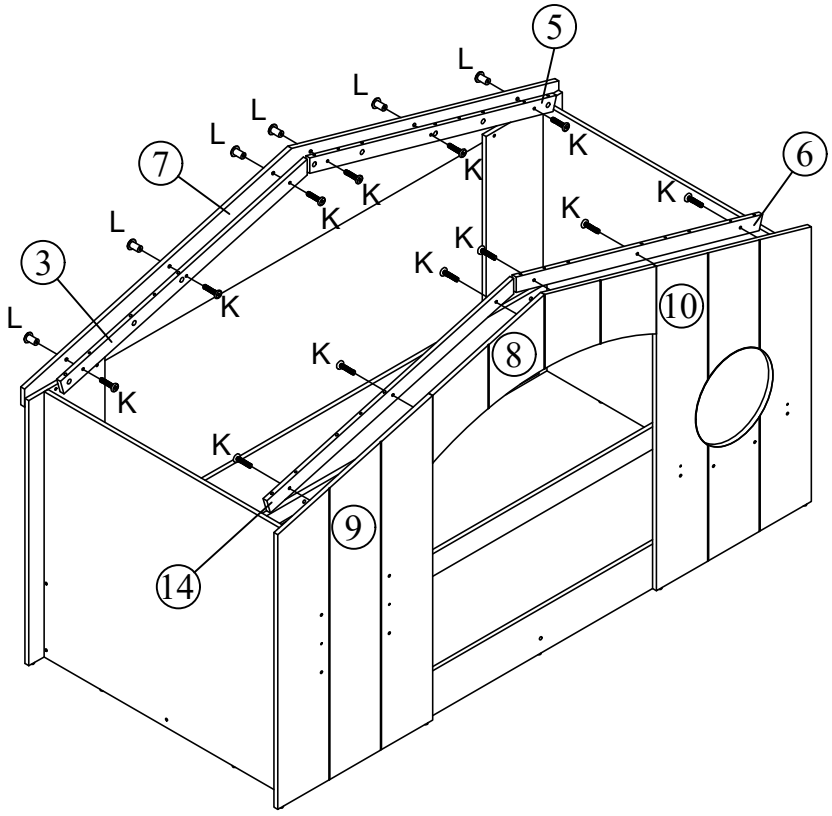

9

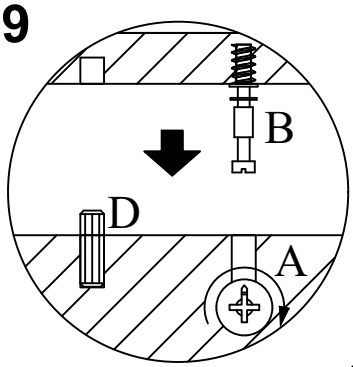

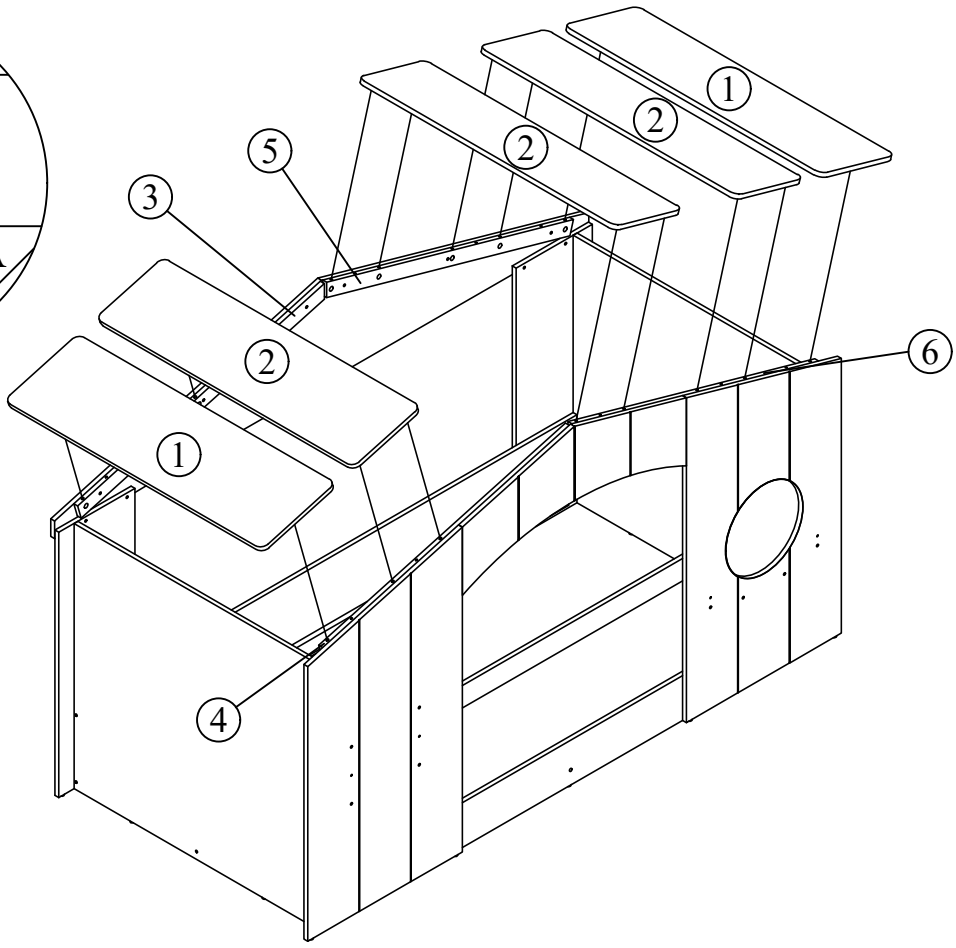

10

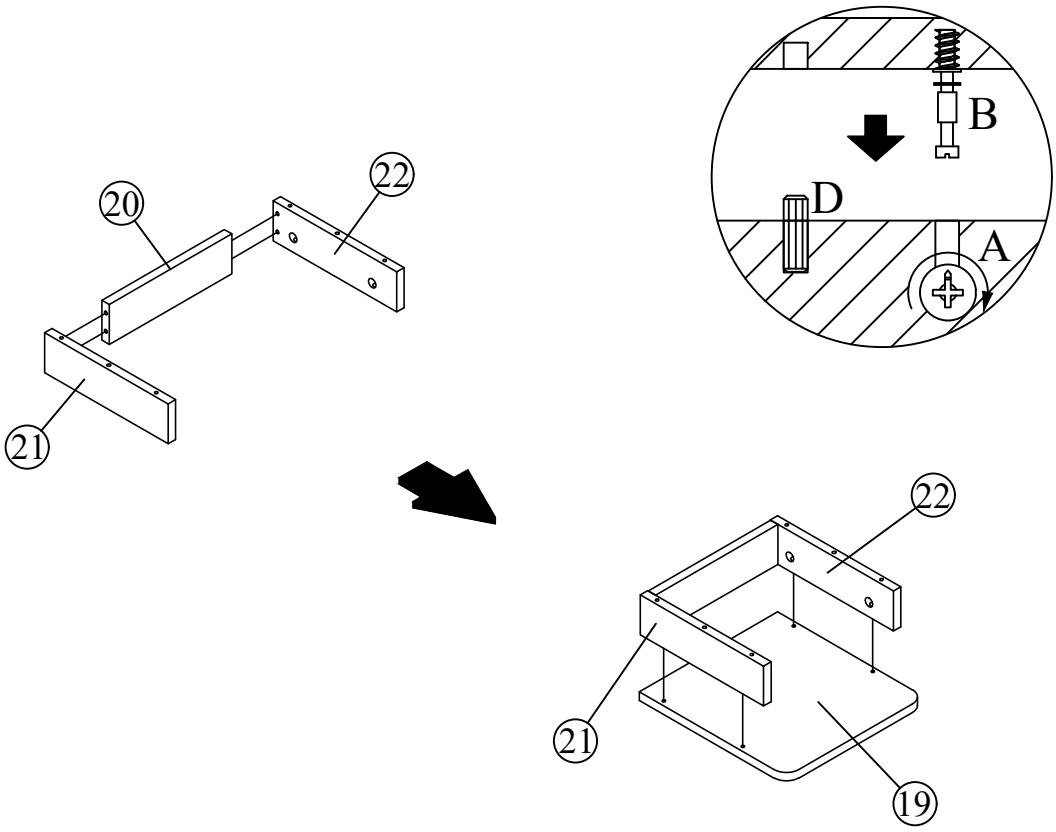

11

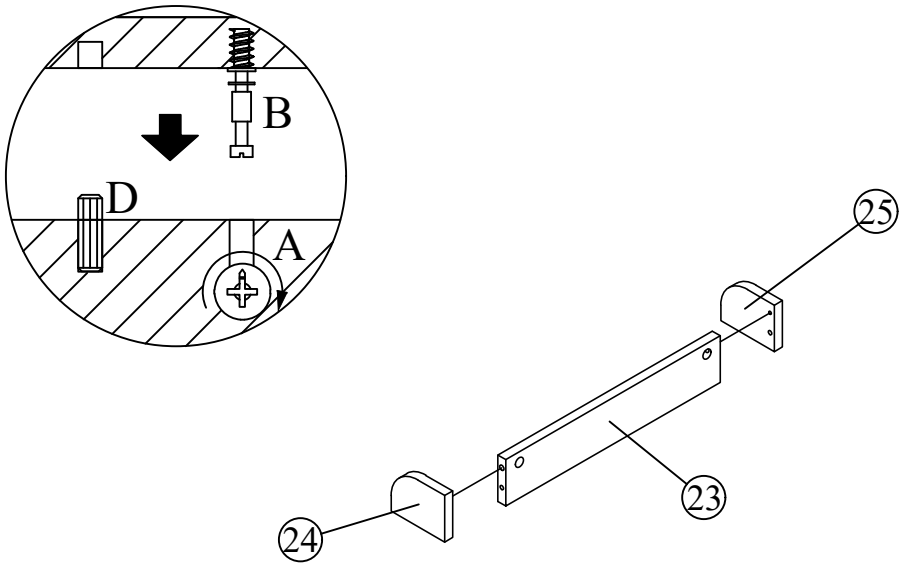

12 F | 8

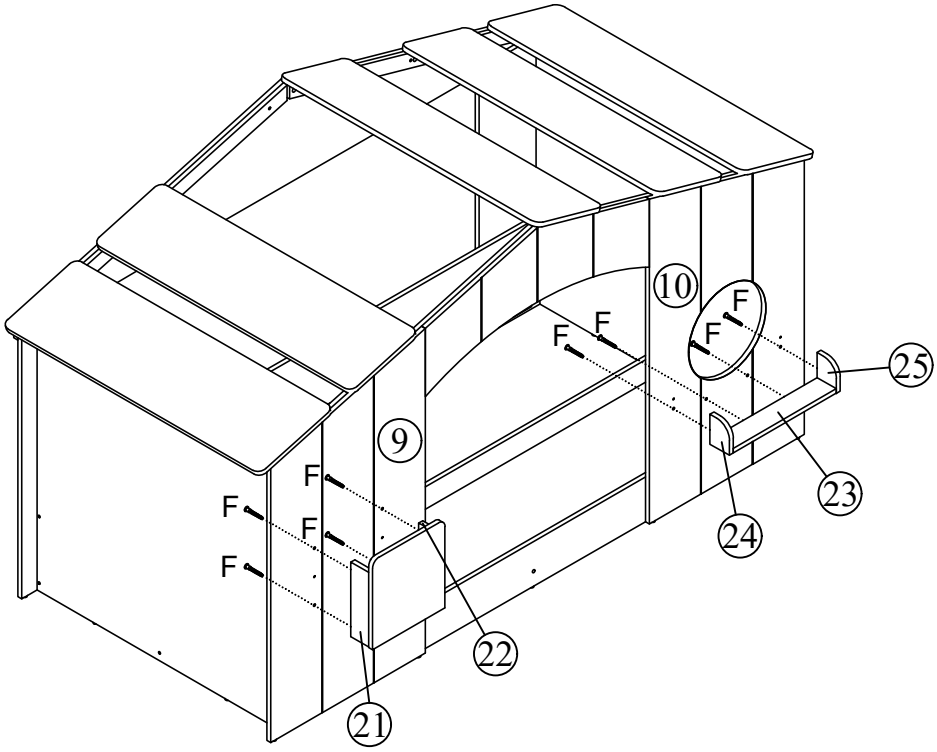

13 H | 16

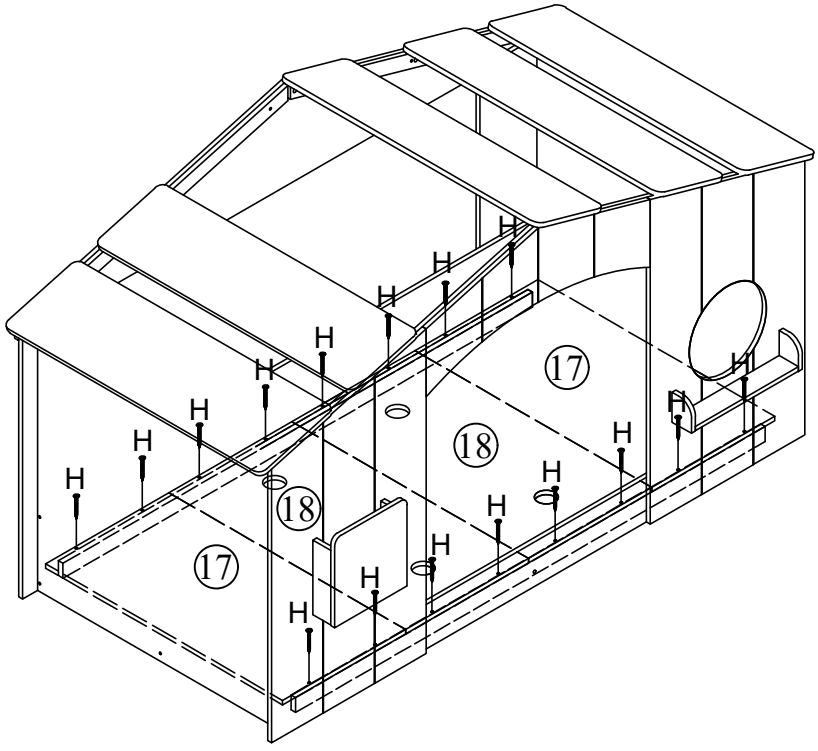

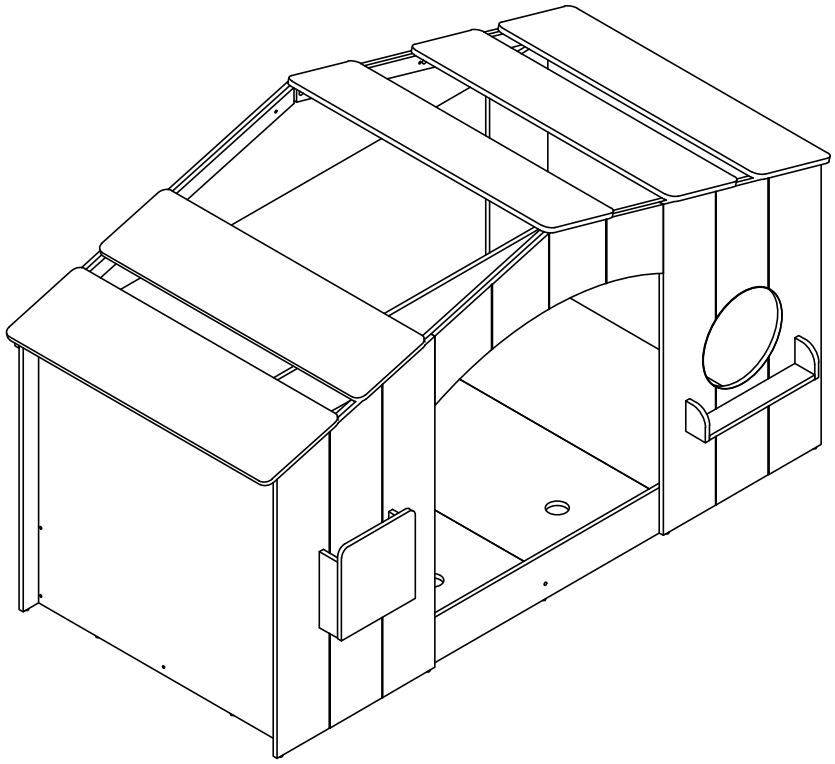

216 x 100 x 122.8 cm

Please dispose of packaging safely and responsibly.

Care & Maintenance of Your Product.

- Tighten all screws periodically to guarantee they are secure.
- Clean with a soft, dry or slightly damp cloth.
- Wipe with a soft cloth; mild soap if needed.
- Dry after cleaning.
- Avoid abrasive pads and strong chemicals.
- Avoid excessive moisture.
- Protect from heat and sharp objects.
- Use protective pads for hot items.
- To move the product lift it into place. Pushing or dragging the product across a floor will cause damage to it.

  If these guidelines are not followed it may invalidate the warranty.
- Note. This product has been designed to be as easy to assemble as possible. In the event that you run into issues putting the bed together or have damaged / missing pieces, please contact us:

FOR PARTS & TECHNICAL SUPPORT VISIT:
Telephone:
01924950108
Email Address:
support@bedkingdom.co.uk

Manufacturer
Flair Furnishings Ltd t/a Bedkingdom,
Old Delivery Office, Oldfield Lane,
Heckmondwike, England, WF16 0JD
support@bedkingdom.co.uk
01924 950108

Flair Furniture Ireland Ltd
20 Harcourt Street
Dublin
DO2H364
help@bedkingdom.ie

Produced in Malaysia for Flair Furniture Ltd t/a bedkingdom.co.uk